South African Road Federation

LEARNER GUIDE

MANAGE LABOUR INTENSIVE CONSTRUCTION PROJECTS

TABLE OF CONTENTS

COURSE DESCRIPTION

ACRONYMS, ABBREVIATIONS AND GLOSSARY 8

1 OUTCOME 1: DEMONSTRATE AN UNDERSTANDING OF LABOUR INTENSIVE CONSTRUCTION DOCUMENTATION 10

1.1 THE PHILOSOPHY OF LABOUR INTENSIVE CONSTRUCTION IS EXPLAINED. 11

1.1.1 INTRODUCTION 11

1.1.2 PHILOSOPHY OF LABOUR-INTENSIVE CONSTRUCTION 13

1.1.2.1 Labour-Intensive Construction Methods 15

1.1.2.2 Labour-Intensive Public Works 17

1.1.2.3 Labour or Machine 19

1.2 LIC CONTRACT DOCUMENTS ARE EXPLAINED IN RELATION TO LIC PRINCIPLES. 22

1.2.1 LIC CONTRACT DOCUMENTS 22

1.2.2 CONTRACT TYPES AND CONTRACTUAL ARRANGEMENTS 29

1.2.3 LABOUR-INTENSIVE SPECIFICATIONS AND DRAWINGS 31

1.3 LIC PROJECT DOCUMENTS AND PROJECT-SPECIFIC SYSTEMS ARE IMPLEMENTED. 33

1.3.1 PROJECT SPECIFICATIONS 33

1.4 THE ROLE AND PARTICIPATION OF LOCAL COMMUNITIES IS EXPLAINED..... 36

1.4.1 COMMUNITY PARTICIPATION 36

1.4.2 THE ROLES OF THE PROJECT STEERING COMMITTEE AND THE COMMUNITY LIAISON OFFICER 39

1.5 THE CONCEPT AND IMPLEMENTATION OF INTEGRATED ENVIRONMENTAL MANAGEMENT IS EXPLAINED 40

1.5.1 THE ENVIRONMENT 40

1.5.2 PRACTICAL APPLICATION OF CONSERVATION PRINCIPLES 41

2 OUTCOME 2: APPLY LABOUR INTENSIVE CONSTRUCTION SYSTEMS IN PROJECTS 43

2.1 LIC ACTIVITIES ARE IDENTIFIED FOR A PROJECT ACCORDING TO LIC PRINCIPLES. 44

2.1.1 CONSTRUCTION OPERATIONS AND ACTIVITIES 44
2.1.2 PERFORMANCE MEASUREMENT BASELINE TOOLS 46

2.2 LIC PRE-PLANNING IS PERFORMED PRIOR TO COMMENCEMENT OF WORKS, ACCORDING TO LIC PROCEDURES 47

2.2.1 PRE-PLANNING 47
2.2.2 INVESTIGATING COSTS 52

2.3 A SITE IS ESTABLISHED INCORPORATING THE LIC PRINCIPLES. 55

2.3.1 SITE ESTABLISHMENT 55

2.4 TASK NORMS ARE ESTABLISHED AND AGREED FOR LIC PROJECT ACTIVITIES 58

2.4.1 INTRODUCTION 58
2.4.2 THE TASK SYSTEM 60
2.4.3 LABOUR FORCE MANAGEMENT 65

2.5 LIC SETTING OUT AND SURVEY TECHNIQUES ARE IMPLEMENTED. 66

2.5.1 LIST OF INSTRUMENTS AND AIDS FOR SETTING OUT 66
2.5.2 DESCRIPTION AND FUNCTION 66
2.5.3 Basic Setting Out 69
2.5.4 How to set out a right angle with a tape measure 70

2.6 SYSTEMS FOR THE MEASUREMENT AND RECORDING OF COMPLETED WORK TASKS ARE APPLIED ACCORDING TO LIC METHODS. 72

2.6.1 INTRODUCTION 72
2.6.2 MEASUREMENT AND RECORDING OF TASKS 76

3 OUTCOME 3: APPLY RESOURCE MANAGEMENT TECHNIQUES FOR LABOUR INTENSIVE CONSTRUCTION PROJECTS 78

3.1 LABOUR REQUIREMENTS FOR LIC ACTIVITIES ARE ESTIMATED ACCURATELY. 79

3.1.1 ESTIMATE LABOUR REQUIREMENTS 79

3.2 LABOUR SELECTION, RECRUITMENT AND INDUCTION PROCEDURES ARE APPLIED TO PROJECTS ACCORDING TO LIC PRINCIPLES. 97

3.2.1 LIC PROJECT STAFF REQUIREMENT GUIDE 97
3.2.2 LABOUR RECRUITMENT 98
3.2.3 STEERING COMMITTEE 99
3.2.4 LEGAL AND STATUTORY REQUIREMENTS PERTAINING TO LIC PROJECTS 99

3.3 INDIVIDUAL AND GROUP TASKS ARE AGREED ACCORDING TO LIC PROCEDURES. 101

3.3.1 ALLOCATE TASK WORK 101
3.3.2 MEASUREMENT AND RECORDING SYSTEM 103
3.3.3 SITE PRODUCTIVITY 104

3.4 APPROPRIATE PLANT, EQUIPMENT AND TOOLS ARE APPLIED ACCORDING TO LIC PRINCIPLES AND ACTIVITY REQUIREMENTS. 107

3.4.1 TOOL AND EQUIPMENT 107

3.5 MATERIAL RESOURCES ARE IDENTIFIED AND PROCURED TIMEOUSLY ACCORDING TO THE REQUIREMENTS OF THE PROGRAMME. 114

3.5.1 MATERIALS 114

4 OUTCOME 4: TRAIN, COACH AND DEVELOP PROJECT TEAM MEMBERS IN LIC METHODS 118

4.1 LIC SUPERVISORS HAVE ACCESS TO THE APPROPRIATE SKILLS & TOOLS IN ORDER TO PERFORM THEIR JOBS COMPETENTLY. 119

4.1.1 TYPICAL RESPONSIBILITIES/DUTIES OF GENERAL FOREMAN (EARTHWORKS) .. 119
4.1.2 TYPICAL RESPONSIBILITIES/DUTIES OF THE SENIOR FOREMAN (DRAINAGE)..... 120
4.1.3 SELECTION AND TRAINING 122

4.2 ON-JOB TRAINING AND COACHING IN LIC METHODS IS PROVIDED TO PROJECT TEAM MEMBERS. 124

4.2.1 ON THE JOB TRAINING FOR TEAM MEMBERS 124
4.2.2 COACHING 128

4.3 DEVELOPMENTAL NEEDS AND CAREER ASPIRATIONS OF TEAM MEMBERS ARE ADDRESSED AND COMMUNICATED 129

4.3.1 CAREER-ORIENTATED TRAINING 129

5 OUTCOME 5: DEVELOP AND IMPLEMENT LIC ADMINISTRATIVE SYSTEMS 131

5.1 RECORDS ARE KEPT IN ACCORDANCE WITH LIC PROJECT PROCEDURES AND QUALITY MANAGEMENT SYSTEMS. 132

5.1.1 RECORD KEEPING 132

5.1.2 TYPICAL LIC PROJECT RECORDS 134

5.2 PERSONNEL ADMINISTRATION IS IMPLEMENTED IN ACCORDANCE WITH LIC PROJECT REQUIREMENT 136

5.2.1 PERSONNEL RECORDS 136

5.3 REPORTING SYSTEMS ARE DEVELOPED, AND APPLIED TO PROJECTS IN ACCORDANCE WITH LIC PROCEDURES. 139

5.3.1 WRITE AND SUBMIT REPORTS 139

5.3.2 CLOSING-OUT AND HANDING OVER THE PROJECT 139

5.3.3 NARRATIVE REPORT ON AN EPWP PROJECT SITE VISIT 143

ADDENDUM 1: EPWP BIGGER PICTURE

ADDENDUM 2: GUIDELINES FOR THE IMPLEMENTATION OF LABOUR-INTENSIVE INFRASTRUCTURE PROJECTS UNDER THE EXPANDED PUBLIC WORKS PROGRAMME (EPWP)

ADDENDUM 3: MINISTERIAL DETERMINATION: SPECIAL PUBLIC WORKS PROGRAMMES

ADDENDUM 4: CODE OF GOOD PRACTICE FOR EMPLOYMENT AND CONDITIONS OF WORK FOR SPECIAL PUBLIC WORKS PROGRAMMES

ADDENDUM 5: SANS 1921 PART 5 (SOUTH AFRICAN NATIONAL STANDARDS)

LIST OF FIGURES

Figure 1 – Labour/Equipment Comparison 14
Figure 3 – Contract Organogram 27
Figure 4 – Community / Project Relationship 37
Figure 5 – Organisation Chart 51
Figure 6 – Boning Rods 68
Figure 7 – Typical Triangle Set 68
Figure 8 – Excavations and Slopes 69
Figure 9 - Profile for trenching and pipe work 70
Figure 10 – Portable Template 70
Figure 11 – Setting out with a Tape 71
Figure 17 – Section through Borrow Pit 109
Figure 18 - Dynamic Cone Penetrometer 111
Figure 19 – Example of a Career Path for a Roads Company 130

LIST OF TABLES

Table 1 – Performance Measurement Baseline 46
Table 2 – Standard Tasks 62
Table 3 – Task Recording Form (Groups or Individuals) 77
Table 4 – How to Calculate the LCM 82
Table 5 – Format of Team Balancing Schedule 86
Table 6 – Orange Farm School Sports Fields: Bill of Quantities 89
Table 7 – Team Balancing Schedule – Example 3.1.5 90
Table 8 – Orange Farm School Sports Fields (High Level Programme) 92
Table 9 – Orange Farm Sports Fields (Detail Programme) 92
Table 10 – Labour Histogram for Orange Farm School Sports Fields 93
Table 11 - Operational Estimating Format 94
Table 12 – Influence of Loading Height on Productivity 109
Table 13 – Dynamic Cone Penetrometer Test Record 111
Table 14 – Dynamic Cone Penetrometer Results 113
Table 15 – Capability Chart 126
Table 16 – How to Instruct 127

DESCRIPTION

Course:	Manage labour intensive construction projects
Level	05

The purpose of this Course is to enable you to understand and explain LIC documentation, apply LIC systems, apply resource management techniques for LIC projects, provide project team member training in LIC methods, and develop and implement LIC administrative systems for projects

By the end of this course you will be able to:

1. *Demonstrate an understanding of Labour Intensive Construction documentation*
2. *Apply Labour Intensive Construction Systems in projects*
3. *Apply resource management techniques for Labour Intensive Construction projects*
4. *Train, coach and develop project team members in LIC methods*
5. *Develop and implement LIC administrative systems*

ACRONYMS, ABBREVIATIONS AND GLOSSARY

Acronyms Abbreviations	Description
AASHTO	American Association of State Highway Transportation Officials
BC	Beginning Curve
BoQ	Bill of Quantities
CBR	California Bearing Ratio
CIDB	Construction Industries Development Board
COLTO	Committee of Land Transport Officials
CPM	Critical Path Method
DCP	Dynamic Cone Penetrometer
Dia	Diameter
DPW	Department of Public works
EC	End Curve
ELHUS	Excavate, Load, Haul, Unload and Spread
EPWP	Expanded Public Works Programme
GCC	General Conditions of Contract
LCM	Lowest common Multiplier
LI	Labour Intensive
LIC	Labour Intensive Construction
m/d	Man Days
mod.	modified
NEC	New Engineering Contract
OBS	Organisational Breakdown Structure
P & G	Preliminary and General
PND	Precedence Network Diagram
PWP	Public Works Projects
SABS	South African Bureau of Standards
SAFCEC	South African Federation of Civil Engineering Contractor
SANS	South African National Standard
SoQ	Schedule of Quantities
SPWP	Special Public Works Programme
WBS	Work Breakdown Structure

Glossary	Description
Cadastral	Showing the boundaries of individual properties in an area (sometimes also the owner)
Conventional	A way something is usually done
Implications	A likely or probable consequence (result)
Innovative	New ideas or methods
Inordinate	Excessive or unusually large
Inter alia	Among other things
Lead-in	The time required for something to happen i.e. the time between when an order is placed until it is actually delivered
Liaison	Communication
Orthophotos	Usually an aerial photograph with geographical image data superimposed on it
Peri-urban	Outside the immediate boundary of a town or city
Precedence Network	A list of activities (in our case construction related activities) that are linked together in the order in which they must be done.
Pro forma (s)	A standard document or form
Terrain	A stretch of land with regards to its physical features – rough, hilly, flat etc.
Urban	Within the boundary of a town or city

OUTCOME

1

1 OUTCOME 1: DEMONSTRATE AN UNDERSTANDING OF LABOUR INTENSIVE CONSTRUCTION DOCUMENTATION

The purpose of this Outcome is to enable you to understand Labour Intensive Construction documentation

This Outcome will enable you to:

1. *Explain the philosophy of Labour Intensive Construction*
2. *Explain LIC contract documents in relation to LIC principles*
3. *Implement LIC project documents and project-specific systems*
4. *Explain the role and participation of local communities*
5. *Explain the concept and implementation of integrated environmental management*

1.1 THE PHILOSOPHY OF LABOUR INTENSIVE CONSTRUCTION IS EXPLAINED

1.1.1 INTRODUCTION

Construction is the action of forming or putting together material components to produce structures such as roads, bridges, dams, irrigation schemes, water reservoirs, sewerage schemes, houses, factories etc.

Some of the benefits of LIC in meeting these construction needs are:

1. There is a dual demand in our country for employment and for infrastructure such as housing and roads. LIC can bring the two together, creating 5 to 7 times more employment per unit of expenditure than Conventional construction methods.
2. Community involvement and training in LIC projects results in the development of expertise in construction management within the community.
3. Training given on the project may enable people to get jobs in industry.
4. The community develops a sense of ownership of the project and is more likely to care for it after initial construction. Routine maintenance programmes are required and must be generated through returns from community services and local government financial support. An equivalent to “municipal services” is set up.
5. The cost should not be significantly different from the cost of conventional Construction methods.
6. The wages paid during construction are spent mostly within the community and boost other local industries (the multiplier effect).
7. There is an opportunity in the community for entrepreneurial development in the field of material supply and as small contractors.
8. LIC tends to do less damage to the environment than Conventional Construction, in terms of pollution by fuels and in the broader context of machinery production and disposal.

LIC has the following dual objective:

1. The construction of a technically sound, economically efficient product (i.e. cost, quality and time receive proper consideration)
2. The generation of significant employment per unit of expenditure.

LIC must also be explained in terms of what it is not:

1. It is not only concerned with job creation
2. It is not emergency relief work
3. It is not the employment of labour without concern for time, cost and quality

This would be Labour *“Extensive”* construction NOT Labour *“Intensive”* construction

1. Correcting Some False Impressions

1. Equipment is highly productive and cheap
2. Labour is expensive and productivity and standards are low

These assumptions are not necessarily correct, especially if a project is in a rural area in a developing country, for the following reasons:

1. When equipment breaks down mechanics and spare parts are often not readily available. The whole project can be brought to a standstill.
2. In order to compare the cost of Labour vs Equipment Intensive methods, the initial cost of the equipment, as well as the running costs, should be taken into account for each project.
3. When there is widespread unemployment, people are prepared to work for competitive wages that are less than the official wages in the formal construction industry. In addition, people working on community projects are often prepared to work for lower wages. Wages may be lower than the Government gazette minimum for a particular region.
4. Productivity can be high if the labour force is properly organized, managed and motivated. Labour Intensive methods can be fully competitive with Equipment Intensive methods at certain wage rates.

NOTE: A Labour Intensive project requires a Labour Intensive design, documentation and management in order to ensure that standards are maintained. This must take into account the fact that people cannot be programmed as machines can.

2. Three Major Misconceptions about LIC

These are:

- More expensive
- Slower
- Lower quality than equipment-intensive construction

Apart from these misconceptions LIC is usually more environmentally friendly.

3. Some common causes of failure of LIC Public Works Projects (PWP)

1. The Project is not properly scaled in magnitude of national manpower needs.
2. Project is introduced in a fragmented and unsystematic way – not as part of an overall development policy.
3. Inappropriate technology used.
4. Lack of administrative backup.
5. Inadequate post-project maintenance – often due to the lack of a programme and/or funding for routine maintenance of community assets.
6. Project is almost entirely dependent on government's commitment to the programme.
7. Project is an "emergency" measure with no interest in the quality of the product or the economic efficiency of the work.

4. Main reasons for success of LIC Public Works Projects (Africa)

1. Long-term national programmes.
2. Sound intellectual assessment of technical feasibility and economic efficiency of using LI methods; cognizance was taken of technological and institutional capacities.
3. Technical, institutional, organizational and socio-economic aspects received attention during planning and implementation stages of project.
4. Strong organizations with good management systems.
5. Payment to labour force is linked to productivity.
6. Effective, extensive training. Project ongoing and sustainable so that there is an effective transfer of skills to the community.
7. Long-term political support.
8. Long-term financial commitment.
9. Good co-ordination between government, those administering the programmes, local authorities, those providing technical assistance and donors. Also effective consultation between community and organized labour.

1.1.2 PHILOSOPHY OF LABOUR-INTENSIVE CONSTRUCTION

Learning Activity Outcomes

This section of Assessment Criteria *will enable you to:*

- *Explain the philosophy, the need for using LIC methods in SA and the social consequences thereof*
- *Understand Labour-intensive construction principles and techniques*
- *Understand the concept of economic efficiency, tasks and task norms*

DEFINITION 1:

LABOUR-INTENSIVE CONSTRUCTION IS THE ECONOMICALLY EFFICIENT EMPLOYMENT OF AS GREAT A PROPORTION OF LABOUR AS IS TECHNICALLY FEASIBLE THROUGHOUT THE CONSTRUCTION PROCESS TO ACHIEVE THE STANDARD DEMANDED BY THE SPECIFICATION; THE RESULT BEING A SIGNIFICANT INCREASE IN EMPLOYMENT GENERATED PER UNIT OF EXPENDITURE BY COMPARISON WITH THE CONVENTIONAL EQUIPMENT-INTENSIVE METHODS

The current definition of *labour-intensive* approach is one that **optimises** rather than **maximises** the labour content of a project. This is implied by the use of the term “economically efficient”. Such projects are also termed *labour-based* or *employment-intensive*. Labour-intensive works will be undertaken by an appropriate mix of labour and equipment possibly with some animal support. The methods used must be **cost-effective** and the end product quality must be fully adequate.

A possible alternative definition could be:

- LIC is a process whereby the conception, design, documentation and implementation of a project are all orientated towards using hand labour to the Optimum and promoting the use of local entrepreneurs in the execution of the work through technical and financial instruction and support.

No project is based on 100% labour only or 100% equipment only:

Figure 1 – Labour/Equipment Comparison shows the gradual change from labour-intensive to equipment-intensive with a transition area where animal power may be used, depending on the proportions of labour plus hand tools and equipment used in a project.

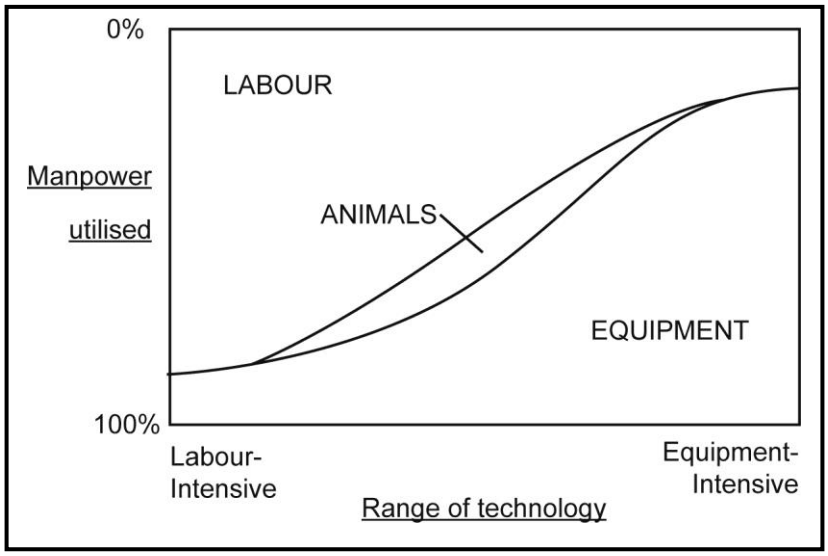

Figure 1 – Labour/Equipment Comparison

The technical feasibility of the use of labour depends upon the requirements of the specification and to a large degree, upon the use of **innovative methods** to achieve the requirements of labour-intensity.

By a “significant” increase in the amount of labour, is meant a **three-to-sevenfold increase in employment**. Conventional rural road construction is highly equipment-intensive and labour saving to the point that only some 10% of construction costs go to labour. In labour-intensive rural road construction about 65% of construction costs go to labour (a 6.5 fold increase).

To summarise, labour-intensive, labour-based, labour-based/equipment-supported and employment intensive construction methods are all considered to mean that the labour content has been optimised and will in most projects comprise between 30% and 80% of project costs.

The meaning of *labour-intensive* or *labour-based/equipment supported* is important and a distinction must be made between:

1. *The temporary use of large amounts of labour to provide short-term employment or income generation in times of crisis. Activities like this are more correctly described as labour-extensive since they make an extensive use of large amounts of labour without necessarily using it very efficiently.*
2. *The creation of systems, procedures and capacities for sustainable employment generation, through local-resource-based approaches, which is what we are concerned with.*

Labour-enhanced construction uses more labour than conventional civil construction, typically 50% to 100% more, but not enough to put it into the labour-intensive category. Labour-enhanced construction methods would have 15% to 25% of construction costs going to labour.

SOUTHERN AFRICAN UNEMPLOYMENT CAN BE ALLEVIATED, PUBLIC WORKS CONSTRUCTED AND INDIVIDUAL AND COMMUNITY CAPACITIES CREATED OR IMPROVED THROUGH WELL PLANNED LABOUR-INTENSIVE CONSTRUCTION AND MAINTENANCE METHODS

1.1.2.1 Labour-Intensive Construction Methods

Reasons for using Labour-intensive construction (LIC) methods are:

1. Unemployment in South Africa

The level of unemployment is high and rising: from 7% in 1980 to 18% in 1991 to over 40% in 2003. The formal employment sector has reduced the numbers of people employed by at least one million over the past decade. Unemployment varies from region to region and may be as high as 70% in certain deep rural areas. Further, the economy as a whole has become more capital-intensive: less employment is being created per unit of expenditure.

Wilson and Ramphele in their comprehensive study "Uprooting Poverty, The South African Challenge" have provided searing accounts of the deleterious effects on individuals of their being unemployed.

2. Housing and public works

Government is faced with explicit demands for housing. Municipal public works such as water supply, sanitation, streets, storm water drainage, electricity and waste disposal will be required for such housing. These needs exist in both urban and rural areas.

While new works are being demanded, existing infrastructure is being neglected and its maintenance under-funded. Even though the problem is difficult to overcome, the provision of housing and public works would be an opportunity to generate employment. Building of houses is already relatively Labour-intensive. However, civil engineering construction is typically equipment intensive and would not generate many jobs unless it became labour-intensive.

3. Individual and community capacities

The legacy of many years of apartheid has resulted in greatly reduced individual and community capacities in technical and institutional terms. Efforts to correct this situation are only now, after some ten years, beginning to bear fruit.

The historical lack of technical capacity means that any proposals for public works should bear in mind the existing shortcomings and the need to create effective local capacity. The provision of housing and public works is a golden opportunity to create employment and to improve individual skills (technical, administrative, managerial and commercial) and community capacity in the whole process of the planning, provision, administration and maintenance of public works.

Appropriate or intermediate technologies have been developed for use in the Third World. These technologies should make use of local resources. Indeed, this approach was one of the pillars of the search for labour-intensive technologies. The concepts embodied in appropriate and intermediate technology remain valid. However, despite the supposed simple nature of these technologies by comparison with “high tech”, severe constraints have been experienced during the fostering of appropriate technology.

Perhaps the major lesson to have been learnt about technology during our exploration of labour-intensive technologies, has been the size of the gap that exists between “no technology” and “appropriate/ intermediate technology”; and consequences for the establishment of appropriate technologies. Amongst the poor there prevails lack of technical experience and extremely low levels of formal education and training. The extremely low educational base means that there is an extremely low absorption capacity. In turn this exerts severe constraints upon the development of even a low level of technical competence. Fostering basic competencies requires considerable expenditure of time and effort.

This experience suggests that the gap between “no technology” and “appropriate and intermediate technology” is much larger than previously implied. There are important implications. In the first place, it is necessary that the type of technology being developed has to be able to be established, without an inordinate amount of resources to the existing technological base. Equally, it has to be able to function in the existing socio-technical circumstances. Here we confront issues related to sustainability. Secondly, while not inordinate, the extent of essential training requires considerable resources.

In turn, there is a need to re-name “expenditure on training and development” as “an investment in development”. This is not merely a switch in perception; it has capital and recurrent budgetary implications. Equally, the extent of training required has to affect political demands for immediately visible results. The lack of an educational and technical base is seldom recognised, or the implications appreciated.

LABOUR-INTENSIVE PUBLIC WORKS ARE VIEWED AS A MEANS OF PROMOTING LONG-TERM AND SUSTAINABLE DEVELOPMENT

1.1.2.2 Labour-Intensive Public Works

1. Objectives

Labour-intensive public works are now viewed not just as a means of creating short-term employment and infrastructure, but also as a means of promoting **longer-term** and more **sustainable development** based on increased use of local people.

The objectives that follow are among those commonly adopted for labour-intensive projects and programmes:

a) create **immediate employment** and **income** for the poor;
b) create the basis for **longer-term employment** for the poor by **transfer of skills** through training; by providing jobs in the **maintenance** and **operation** of the newly built infrastructure and by providing enhanced opportunities for increased agricultural and commercial activities;
c) produce a general shift within the construction sector in favour of using **more labour-intensive** and **less equipment-intensive** methods so as to enhance poverty alleviation;
d) **promote the involvement** of local communities and other beneficiary groups in the **planning, construction** and subsequent **maintenance** and **operation** of infrastructure projects;
e) increase the sustainability of infrastructure projects through **optimum use of local resources**, thus making maintenance affordable;
f) promote and create linkages in the local economy by developing a **manufacturing capacity** in the local private sector (tools, simple equipment and production of building materials) and linkages to activities supported under separate projects in agriculture and other sectors;
g) impart skills to local government and private sector personnel through **training**.

2. Experience

Experience with labour-intensive works has generally been successful, assessed by their ability to provide cost-effective construction. However, to be truly successful labour-intensive works should create short-term employment during construction and longer-term employment both as a result of the investment and for the physical maintenance of the investment; they should stimulate the local economy and local markets and they should have a positive impact on the environment.

3. Technical feasibility

Technically the works carried out with labour-intensive methods and using locally available resources should be comparable to works that would be obtained by conventional capital-intensive methods. The facilities should generally be easier to maintain and operate using local resources.

The following types of works have successfully been executed using labour-intensive methods:

- Gravel and earth roads;
- High standard base courses for heavily trafficked streets and national roads;
- Small and medium-scale irrigation schemes;
- Soil and water conservation works, including small dams;
- Forestation projects;
- Water supply schemes
- Buildings for various purposes.

Certain activities inherent in these types of projects cannot be carried out effectively by labour-intensive methods. For example, heavy compacting of earth layers in dams and roads, and transportation of materials over long distances.

Only certain types of projects are suitable for construction by labour-intensive methods. Broadly speaking, earthworks are suitable in that the activities of excavate, load, haul, unload, spread (ELHUS) can be done manually. However, as haulage is generally done by wheelbarrow, the length of haul must be restricted to economic limits.

Other suitable activities are stone masonry of all types, paving, fencing, landscaping and planting, concreting (can be equipment-assisted), pipe-laying and building work.

Local content can be increased by using materials, skills and facilities from the area where the work is to be done. For example, if stone and masonry skills are available, stone can be quarried locally and used to construct masonry arch structures for dams, bridges and culverts.

4. Design of labour intensive works

At the design stage, the method of construction as well as the method for subsequent maintenance is often specified or implied. Conventional designs (which often have their origin in industrialised high income countries) are heavily biased against the use of labour-intensive methods.

For example: road alignments are designed so that excavated earth materials will have to be hauled considerable distances to be used as fills (termed longitudinal earth balance): in practice this can be done efficiently only by machines.

The alternative design strategies suitable for labour-intensive methods would be to choose an alignment that balances the earth cut and fill transversely, generally avoiding hauls longer than can be done effectively by wheelbarrow.

MANY CONSTRUCTION ACTIVITIES CAN BE UNDERTAKEN BY EITHER MACHINE OR LABOUR

1.1.2.3 Labour or Machine

1. Economic efficiency

The method used for carrying out a construction activity should be **cost-effective**, that is, it should be the cheapest method. Not all construction operations or activities can be undertaken by labour, some have to be done by machine. Similarly, not all construction activities can be undertaken by machine: some have to be done by labour. Many construction activities can be undertaken by either machine or labour. The primary objective of labour-intensive construction methods is to **maximise the use of unskilled labour** and **minimise the use of capital equipment** to build works at speed, quality and cost at least comparable with those of conventional method.

So, in choosing the construction method, we must look at the speed, quality and cost of each method before a cost-effective choice can be made.

In a community where LIC methods have never been used, the introduction of new work methods might be more expensive at the beginning, however, after a learning period, costs should go down so that in the medium-term the methods become cost-effective.

The economic viability of LIC methods is critically dependent of labour productivity and that is only satisfactory when workers are paid correctly and regularly. **Productivity is considerably higher when labour is working on task- or piecework than when working on a day work basis.**

“Daily Task Work” is the amount of work one person can do in one day, to the quality required. Alternatively, **“a task is what an average person can do in an average day”**. One daily task is paid with one day’s wage. The worker is allowed to go home when the task has been completed to the desired quality. These are used as standard tasks when giving work to people and in calculating the costs of labour.

“Piecework” allows workers to perform as much work as they wish; the amount completed per person is measured and paid for at an agreed rate per cubic metre, square metre or metre. Normally no restrictions are placed on the hours worked and keen workers literally work themselves to death while earning unusually large wages. However, piecework is difficult to organise and to administer, as every individual must be given sufficient space to perform their work without overlapping and the work done by each worker must be individually measured up for payment.

As an alternative to piecework, multiple tasks allow workers to perform a whole number of tasks during the payment period (which is normally two weeks or a month). This is easier to organise as normal tasks are set out, instead of a virtually unlimited quantity of work (which piecework implies). This is also much easier to administer, particularly if coupled with some reasonable restriction on working hours that allows the number of tasks to be counted and recorded by a tally clerk during normal working hours.

It must be noted that not all work can be tasked. Road construction can generally task only about 60% of all the work. The rest is then paid on a daily wage or day work basis, workers being busy for 8 hours.

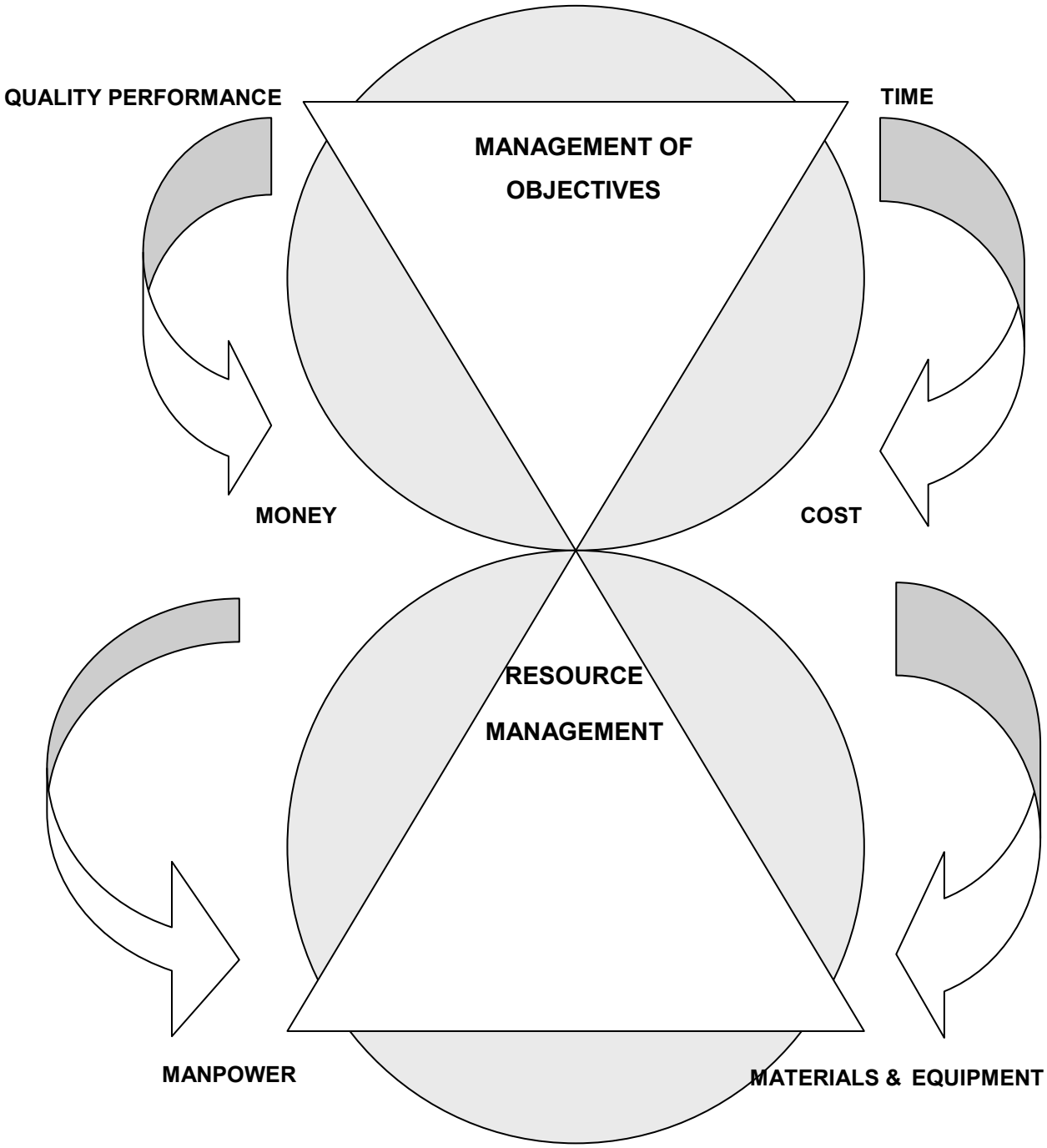

Figure 2 – Project/ Programme Management Model

1.2 LIC CONTRACT DOCUMENTS ARE EXPLAINED IN RELATION TO LIC PRINCIPLES

1.2.1 LIC CONTRACT DOCUMENTS

Learning Activity Outcomes
This section of Assessment Criteria will enable you to:
Understand and be able to explain LIC contract documents in relation to LIC principles

REVISE THE CONTRACT DOCUMENTATION MATERIAL YOU LEARNED

1. Summary

Contract documents comprise all the papers, specifications and drawings that describe a construction contract. They must be read together, as between them all, they describe what the contract is about, how it should be built and the size and quality to which is should be built.

A tender is an offer to construct a specific thing for a particular price in a certain time. The client gathers all the tenders, decides which is the winning tender and then awards the contract to that contractor. The Form of Agreement is signed by the client and the contractor to make the contract legal. The work can then begin.

It is vitally important to study all the points in the conditions of contract and consider what the consequences will or could be for your work. If you foresee problems, remember to take them into consideration when pricing. Most important points to always look for in the conditions of contract are:

- Contract period, including the starting and finishing dates (e.g. when do I have access to the site? Do I need extra resources to meet the finishing date?)
- Methods of payments (e.g. what is the procedure for interim payments? How long after submission should the Employer pay? Is it likely that I will receive payment on time?)
- Retention money (e.g. what is the % deducted, and when will it be paid back?)
- Payment for materials on site (e.g. what % of the value is paid? What are the conditions?)
- Payment for extra work and variations (e.g. what are the conditions for payment for extra work? What rates are used for variations: from the BoQs or decided by the Employer, or both of you together?)
- Price fluctuations (e.g. is there a procedure to compensate for severe inflation? If not, include all allowance in your tendering price)
- Insurance and indemnities (e.g. what is the cost of insurances needed according to the contract? How are you compensated for your costs?)

- Liquidated damages (e.g. how much to pay and under what conditions? Are they reasonable compensation for income cost? Is there a high risk that you will have to pay liquidated damages?)
- Extension of time (e.g. are there conditions stated in the contract concerning when you would be allowed extension of time? Is the length of the extension set by the Employer or decided by the two of you together?)
- Termination of contract (e.g. what are the conditions for termination by the Employer? What are the conditions for termination by you? Have you had experience with this Employer, and are you likely to run into problems that can lead to termination?)
- Arbitration (e.g. who appoints the Arbitrator? What are the steps that must be taken before the case goes to arbitration?)

2. Conditions of tender

The Conditions of Tender (which fall away after tendering and do not form part of the contract) describe the conditions that have to be met to produce a valid tender.

Some LIC considerations:

- Eligibility requirements
- Information to be submitted with the tender
- Targeted procurement policy (SANS 1914-5)
- Rating of Contractor (LIC training experience)
- CIDB Grading of Contractor

3. Agreement Forms

Copies of the Agreement forms (Form of Agreement and Notification of Acceptance) are added to the tender documents, as these forms have to be filled in by both parties to bring the contract into being. They are left blank until the contract is awarded.

Some LIC considerations:

- Agreement form to clearly stipulate that it is a LI project
- Schedule of Deviations where LI considerations can apply

4. General Conditions of Contract

General Conditions of Contract give the commercial and legal side of the construction contract. They are termed ***general*** conditions because they are common to most contracts. If the New Engineering Contract (NEC) general conditions are used, then the following form part of the conditions:

- Core clauses
- Optional clauses (main and secondary)
- Schedule of cost components
- Contract data

Other types of General Conditions often have “Special Conditions” attached that modify the wording and meaning of specific clauses.

For example:

- Payment for the LI component of the works
- Applicable labour laws
- Amendments to the various clauses of the form of contract should the liabilities, obligations or procedures change or be altered depending on the contractual arrangements/ EPWP implementation approaches/ Delivery model used on the EPWP project

Tenderers **must** read the General Conditions before completing their tenders to ensure that they price the contract correctly, particularly with regard to risks. This is import as many of the General Conditions of Contract in use are superficially similar but differ in critical areas such as the way risks are shared or shed by the employer and loaded onto the contractor. Once a contract has been signed it cannot be changed. Both contractor and client must follow the terms of the contract, in full, or the contract is breached, with serious consequences.

Additional Clauses added by the Ministerial Determination for LIC projects are as follows: Clauses 19 to 21

19 Contractor’s default in payment to Labourers and Employees

Any dispute between the Contractor and labourers, regarding delayed payment or default in payment of fair wages, if not resolved immediately may compel the Employer to intervene.

The Employer may, upon the Contractor defaulting payment, pay the moneys due to the workers not honoured in time, out of any moneys due or which may become due to the Contractor under the Contract.

20 Provision of Hand tools

The Contractor shall provide his/her labour force with hand tools of adequate quality, sufficient in numbers and make the necessary provisions to maintain the tools in good and safe working conditions.

21 Reporting

The Contractor shall submit monthly returns/reports as specified below:

- Signed Muster rolls/pay sheets of temporary workers and permanent staff detailing the number, category, gender, rate of pay and daily attendance.
- Plant utilization returns
- Progress report detailing production output compared to the programme of works.

5. Schedule of Prices

The Schedule of Prices, perhaps better known as the Bill of Quantities, is a schedule that is priced by the tenderer. The contract price or value is extracted from the schedule.

Some LIC considerations:

- Items to be indicated with prefix 'LI' in BoQ
- Payment for LI items will not be made unless they are constructed using LI methods
- Specific payment items to be included to suit LIC
- Training allowance paid to targeted labour
- Extra over for the administration of payment of training allowances
- Transport and accommodation of workers for training

6. Works information (this may be named the Project Specification or the Project Conditions)

Some other LIC considerations would be:

Portion 1 or Part A:

- Employers objectives
- Labour intensive scope of works (operations - and activities if required)
- LI competencies of supervisory and management staff
- Employment of unskilled and semi-skilled workers in LI works
- List of applicable parts of the standardized specification applicable to the project and the Generic LI specification
- Penalties/ compliance issues for LIC

Portion 2 or Part B:

- SANS 1921 (5) Specification data
- Project Specification clauses as amendments to the standardized specifications to make it work labour intensively

7. Site Information

Site Information is information specifically pertaining to the condition of the site itself:

- Maps
- Distance to sources of local materials and source/s of water
- Reports
- Records of existing services
- Weather and environmental data
- Ground conditions for material classification to set tasks/ task unit rates/ production rates
- Availability of local workers, local industry and local skills for the project
- Task rates (if prescribed)
- Relevant community information

8. Appendices

Appendices are used to contain data that might be difficult to bind into the main document and would include:

- Specifications (hard copies of all the relevant documents and standards) and
- Drawings (copies of all the drawings, diagrams and maps)
- EPWP reporting requirements
- Any additional information to support small/ emerging Contractor for tendering purposes
- List of project staff and their contact details including evidence of having met the eligibility requirements to engage on the EPWP
- Specific/ special provisions for LIC nature of work included in the standard pro forma's to be completed by the Tenderer

9. Types of specification

The main specification types in use are:

- Method specifications
  - ✓ Specifications put together for at least each LI operation
- End result specifications
  - ✓ Build within the standardized specification
- Standardised specifications
  - ✓ Specifications that can be used on any project
- Project Specification
  - ✓ Clauses of the standardized specifications amended to make it work labour intensively
- Particular specifications
  - ✓ Specifications put together for LIC where there are no others to reference from

    (SANS 1921 Part 5 has particular reference here – see Addenda)

9.1 Method specification lays down the steps that must be followed in the construction work. Contractors are cautioned that method specifications must be followed as doing otherwise could be considered a breach of contract and could lead to termination of the contract. The final quality of the work depends upon following the method specification exactly. If this is properly monitored it makes quality checking very simple, as no additional tests are required.
Many labour-intensive specifications are written as method specifications. The intent is force the contractor to use labour-intensive methods in the construction work.

9.2 End result specification lays down the quality of the work without saying how it should be achieved. This gives the experienced contractor room to use his/her/her experience to achieve the final product, however he/she feels best. No limitations are set on the methods or equipment that the contractor might use. Extensive quality testing is normally needed.

9.3 ***Standardised specifications*** are broad specifications that cover a particular class of construction to the extent that the specifications are generally applicable throughout the Republic of South Africa".

Examples are:

- SANS 2001 Standardised Specifications for Civil Engineering Work (and)
- COLTO Standard Specifications for Road and Bridge Works for State Officials.

Note that these specifications do not give project specific information and so are inadequate on their own.

9.4 ***Particular specifications*** *are specifications specially written for the project because no standardised specifications exist.*

10. Types of contracts for LIC

The organogram below refers:

1. The Employer or Client appoints a Design Consultant to prepare designs and contract documents. The Engineer is generally one of the consultant's senior engineers, who oversee the construction contract. Note that there is only a communication link between the consultant and the contractor, there is no contractual link.
2. The Employer or Client also appoints the Contractor who may be a conventional contractor who arranges sub-contracts with Specialist Contractors, obtains materials form Suppliers and employs labour directly.
3. Another option is that the Employer or Client appoints a Construction Manager who arranges sub contracts with Specialist Contractors, a Materials Manager who obtains materials from Suppliers and a Labour-only Contractor who employs labour.
4. A further option is for the Employer or Client to appoint a Managing Contractor who contracts out all the other functions.

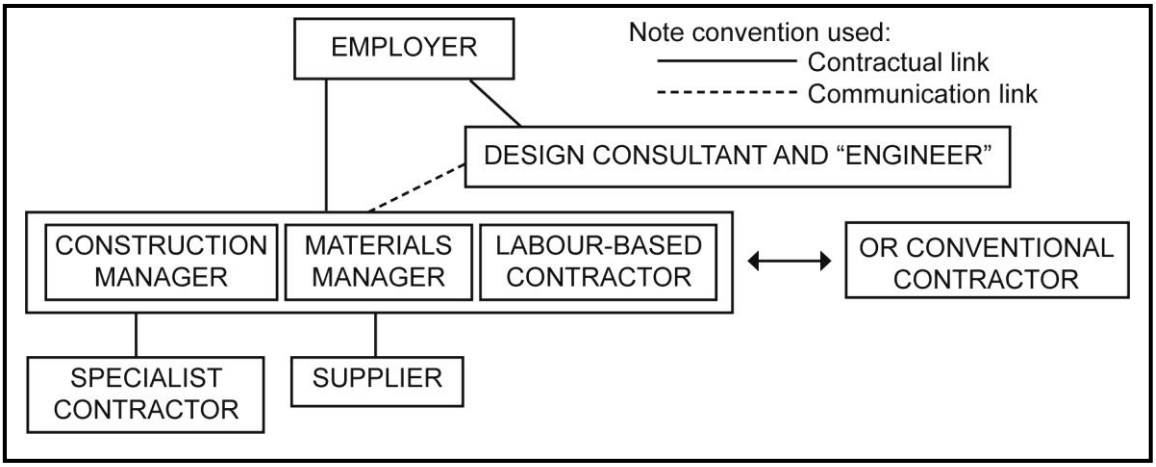

Figure 3 – Contract Organogram

11. Contractors' Difficulties

1. Lack of capital prevents Contractors form being able to provide surety and working capital for even small contracts.
2. Lack of relevant expertise in Civil Engineering construction, management and technical fields.
3. Insufficient appropriately sized contracts.

The Framework Agreement for Public Works Project using LIC systems addresses these issues as follows:

1. Special provision for the waiving of the requirement regarding sureties and for prompt and frequent payment of monies due will facilitate black contractor entry into the system.
2. Training and development programmes for contractors receive special attention in the agreement.
3. All projects are to include a specific budget for training.

1.2.2 CONTRACT TYPES AND CONTRACTUAL ARRANGEMENTS

Contractual Alternatives	Merits	Demerits	Benefit/s for LIC
1. Labour Intensive Contractor approach OR Main Contractor and sub-Contractor approach (Suitably for larger and more complex projects)	○ An emerging Contractor who has advanced to the stage of acting in the capacity as a main Contractor ○ Proven method ○ Low risk to client (main contractor responsible) ○ Formal relationship (between main and sub-contractor) ○ Simple organogram ○ Time, cost & quality Contractors primary concern ○ Unbundling of the contract to make provision for skilled sub-Contractor engagement	○ Skills transfer not the primary concern - capacity building restricted as sub-Contractors must be able to deliver ○ Nominated sub-Contractors if risk not shared ○ Limited scope for LIC	○ Use of skilled local sub-Contractors ○ An emerging Contractor who has advanced to the stage of acting in the capacity as a main Contractor
2. Project Management approach (Suitably for large and complex projects OR large programmes)	○ Guided by professional 'Construction' Project Manager (mostly preferred by Provincial Government Departments) ○ For programme approach or integrated development approach ○ Mentoring can be provided by the Project Manager – this approach can then align closely with Alternative no. 4 below with the use of small emerging Contractor development. Also the Project Manager can mentor provincial & municipal technical & administrative staff ○ Time, cost & quality the primary concern	○ Can be more expensive at project level only ○ Normal GCC responsibilities can shift from the various role players with the addition of the Project Manager role ○ Limited scope for LIC	○ Suitable for LIC programme OR integrated development approaches particularly for the development of poverty nodal areas ○ Mentorship support
3. Direct Labour approach (Suitably for smaller and less complex projects)	○ Use of professionals (Contractor or Consultants) minimized or not made use of at all ○ Maximise local engagement more than any of the other alternatives herein ○ Can use in-house (municipal) approach with more community engagement – can be used to develop their skills, e.g. PMU staff and community structures	○ Not profit motive driven ○ 100% commitment from community is necessary ○ High risk ○ Time, cost and quality can be compromised	○ Maximum scope for LIC in every way (local employment opportunities and training) ○ Highest % of project monies circulated in the community ○ Municipal and community capacity building

Contractual Alternatives	Merits	Demerits	Benefit/s for LIC
4. Contractor Support Group approach OR Third Party Management Support [SANS 1921 Part 4]	○ The organogram in the module represents a collective system rather than a hierarchical system ○ The EPWP emerging Contractor learnership programme would be aligned to this alternative ○ Ideal for the development of small emerging Contractors, developing specialist or sub-Contractors ○ Unbundling of the contract for developmental purposes ○ Certain contractual requirements can be waived	○ Management structure not desirable ○ Normal GCC responsibilities can be shifted to the various role players who provide support to the contract ○ High risk contract – Client to share some of the risk ○ Time, cost and quality can be slightly compromised for the developmental process – can require high Mentor to emerging Contractor ratio	○ Development of small emerging Contractors ○ Development of emerging specialist or sub-Contractors ○ Mentorship support ○ Maximum scope for LIC (local employment opportunities and training)
5. Other: Joint Venture approach (see CIDB joint venture agreement)	○ Big daddy & son/s coaching approach – safe contractual environment for developmental purposes of small emerging Contractors, etc. ○ Resource sharing or pooling together of key resources for a project	○ Window dressing – is/are the son/s really working or enjoying the ride? ○ Conflict of interest ○ Lack of experience and clear coverage to role players roles & responsibilities	○ Development of small emerging Contractors ○ Development of emerging specialist or sub-Contractors

LABOUR-INTENSIVE SPECIFICATIONS

1.2.3 LABOUR-INTENSIVE SPECIFICATIONS AND DRAWINGS

1. Specifications

Unfortunately there are no standard Labour-intensive construction specifications. Each client and/or consultant will draw up a specification to suit the project. These specifications are often based upon other standard specifications like:

- SABS 2100 Standardised specifications for civil engineering works
- COLTO Standard Specifications for Road and Bridge Works

The two standard specifications listed above are machine-based in all respects. Changing these to labour-intensive construction principles is difficult as every aspect from construction methods to methods of measurement and to quality standards is machine based.

Construction specifications contained in the contract document should cover scope, interpretations, limitations, approval and preference of contradiction instructions, Bill of Quantity items, materials and tools to supply, construction notes, tolerances, testing, measurement and payment.

The Manager who uses such specifications must obtain copies of the tenderer's qualifications that were accepted by the Client and the Engineer (in writing) and must understand them properly. If he/she/she does not understand exactly what is meant by the specification and the tenderer's qualifications, he/she/she cannot build the works correctly and so must get the specification fully explained before starting to work.

2. Drawings

The following points should be considered:

- The construction drawings should be simple and descriptive, with the accent on the 'how' as well and the 'what' and 'where'.
- Construction schedules should detail specific repetitive tasks to simplify and remove clutter from layout drawings.

The use of recent orthophoto's with a design overlay has been suggested to be appropriate in the preparation of drawings. The argument for this approach was that the real picture of topographical information, informal structures, trees and gardens are easier to understand for the unsophisticated contractor than formal drawings. It was also suggested that cadastral boundaries should also be plotted to obviate encroachment. This approach was used in Lilingwe, Transkei (Croswell, 1989).

3. Design Follow-up

During implementation, it can be expected that amendments will be necessary to the original design. On completion of construction there may be variations, which need to be re-measured and to be indicated on the record drawings.

It is recommended that accurate “as-built” measurements be made as interim sections of work are tested, approved and handed over; and that this task should not be delayed until the whole project is complete, especially where underground services are concerned. Inaccurate record drawings lead to damage of services when infrastructure is upgraded at a later stage and could lead to unnecessary damage claims.

1.3 LIC PROJECT DOCUMENTS AND PROJECT-SPECIFIC SYSTEMS ARE IMPLEMENTED

Learning Activity Outcomes

This section of Assessment Criteria will enable you to:

Understand and be able to use the project documents and systems to implement Labour-intensive construction of the works.

PROJECT SPECIFICATIONS GIVE ALL THE PROJECT-SPECIFIC INFORMATION AND SHOULD BE READ TOGETHER WITH THE STANDARDISED SPECIFICATIONS

The project specification will give you:

- A description of the works and scope of the work to be performed,
- Name or list the Standardised Specifications used and give all the changes to them that makes the work labour-intensive.
- A list of drawings for the works.
- Name what works and things the employer will supply.
- Employer's key dates schedule.
- Any special requirements on completion of the work. Often there are no such requirements laid down.
- Infrastructure provided by the employer for use by the contractor (like water and electrical power).
- Limitations on the contractor's performance of the work. This section should give the labour-intensive requirements in full.
- Other works information relevant to the job.

1.3.1 PROJECT SPECIFICATIONS

Various requirements for LIC contracts can be laid down in the project documents. Several such items are discussed below.

See Guidelines for the Implementation of Labour-intensive Infrastructure Projects under the Expanded Public Works Programme (EPWP) – Addendum at the back of this document.

1. Community participation

Community objectives should have been assessed during pre-planning by the Client and must be taken into account. Particularly any agreements made between the project sponsor and the community must be honoured and should have been incorporated into the tender documents, this making the agreements contractually enforceable. This also allows the contractor to access the potential costs and risks involved during tender preparation.

2. Training

Training is usually a contractual requirement and is normally fully detailed in the tender. Training should be undertaken timeously. Skills courses must be properly planned and programmed. People need to be trained in particular skills in time for these skills to be used on construction. Contractor Development training is often included in the contract.

3. Local resources

Most Labour-intensive construction contracts state that use must be made of local material and labour resources. This makes good sense as the use of local materials often requires local labour resources as input and can increase the wages left in the community. Examples are the use of locally quarried stone and pit sand from local borrow pits and sand from local streams and rivers. The use of transported-in manufactured materials can substantially reduce the wages left in the community. Examples are factory-made precise concrete pipe, box culvert and manhole sections. If precise concrete sections are needed on the site, consideration should be given to on-site manufacture.

Local industry should be encouraged where possible. Where quality specifications exclude local products, assistance may be given to improve local quality to the required levels. Examples are locally produced concrete bricks and steel window frames. Alternatively, training can be given to local workmen or artisans to set up as suppliers or subcontractors, and high quality raw materials can be procured through the construction contract for their use.

4. Sub contracts

If some of the work is to be contracted out (as sub-contract or as independent contract), potential contractors must be selected. The Client may have included a list of preferred sub contactors in the contract documents. If not, a comprehensive selection process with built-in checks is essential, in order not to waste time or resources. Once existing contractors have been identified, contract documents can be issued and the tendering process initiated.

5. Records

It is advisable to maintain accurate records of production so that productivity can be calculated for every activity. This helps planning and can form the basis of more accurate tendering in the future. Some Clients will demand copies of these records.

The quality requirements of the contract will also need records of materials, tests, survey checks and more to be kept. As these are contractual requirements, careful reading of the specifications will be essential before an adequate quality record system can be set up.

6. Reporting

In addition to the normal progress bar charts, there are likely to be special reporting requirements for a Labour-intensive contract (Refer to the contract documentation). Numbers of labourers employed on various operations, as well as the gender ratio, is a normal LIC requirement. Details of skills training given to the labourers are also often required. Sometimes clients ask for detailed personnel lists, showing how many local people have been employed in management, supervisory or inspection jobs on the contract. In addition, most client bodies demand details of “previously disadvantaged” sub-contractors: how many received training, how many passed, how many are presently employed on the contract and what the values of the sub-contracts are? Occasionally clients want details of activities involving the community, like evening classes in adult basic education that are open to labourers and members of the community.

1.4 THE ROLE AND PARTICIPATION OF LOCAL COMMUNITIES IS EXPLAINED

Learning Activity Outcomes

This section of Assessment Criteria will enable you to:

Understand and be able to explain the process of community participation in a construction contract.

"COMMUNITY PARTICIPATION" IS AN ACTIVE PROCESS DURING WHICH INDIVIDUALS, GROUPS AND ORGANISATIONS HAVE THE OPPORTUNITY TO BE INVOLVED IN AND TO INFLUENCE THE DIRECTION AND THE EXECUTION OF DEVELOPMENT PROJECTS. THE AIMS OF COMMUNITY PARTICIPATION ARE TOWARDS IMPROVING PROJECT EFFICIENCY AND EFFECTIVENESS, EMPOWERMENT AND BUILDING BENEFICIARY CAPACITY. TYPICAL OF THE GROUPS AND ORGANISATIONS THAT MUST BE BROUGHT INTO THE PROCESS ARE THE TRIBAL AUTHORITIES (IF ANY), THE LOCAL MUNICIPALITY AND OTHER RELEVANT COMMUNITY STAKEHOLDERS (CHURCHES, FORUMS, COMMITTEES, ETC)

1.4.1 COMMUNITY PARTICIPATION

Community participation should start soon after project concept, should help to mould the concept and should continue to be involved in all decisions throughout the project process. The role of the project sponsor is crucial and the depth and extent of community participation depends primarily on the "openness" of the sponsor to allow direct sharing by the community in decisions.

Community participation should be broad, in that it should involve *all* those people, group and organisations that have an interest in the development project. **Representation of the community** by **nominated or elected representatives** is a practical side of democracy, as it is seldom possible to hold sufficiently frequent open meetings for everyone to have their say. However, the project sponsors have to ensure that the representatives give regular feedback to their constituencies and obtain constituency endorsement for important decisions. Problems may arise around how the representative is chosen: by secret ballot (formal) or by show of hands (symbolic). Poor representation can lead to bad decisions, poor prioritisation and ineffective participation in the project by the community.

Workshops with the community are vital. The workshops should include items such as task-based payment and task-based work. The community should agree on the LIC methods prior to construction. Workshops have to be repeated on a regular basis.

1. Goals of Community Participation

1. To empower the community:

This is of particular importance in South Africa. Black communities in general were disempowered in the old dispensation. This instilled in people a sense of not being able to change or influence things. Community participation can only begin to reverse this if there is a real commitment to empowering the community. In a community this process is aimed at trying to empower those who have been marginalised in the past.

2. To allow the community to influence the development process.

3. To respond to the felt needs of the community.

4. To pass on knowledge and skills:

Professionals must let community people believe that only they know what their needs are and to facilitate ways of how to deal with them. Community participation means that we have to change our attitude and pass on our skills and knowledge to the community. **This is part of the process of empowering the community.**

2. Community objectives

These must be assessed during pre-planning by the project sponsor and must be taken into account by contractor. Particularly any agreements made between the project sponsor and the community must be honoured.

Dispute resolution systems must be set up. If the project sponsor has not done so, then the contractor must, as the primary objective will be to solve labour disputes. However, the system must also include a mechanism for resolving disagreement between the community and the project organisations.

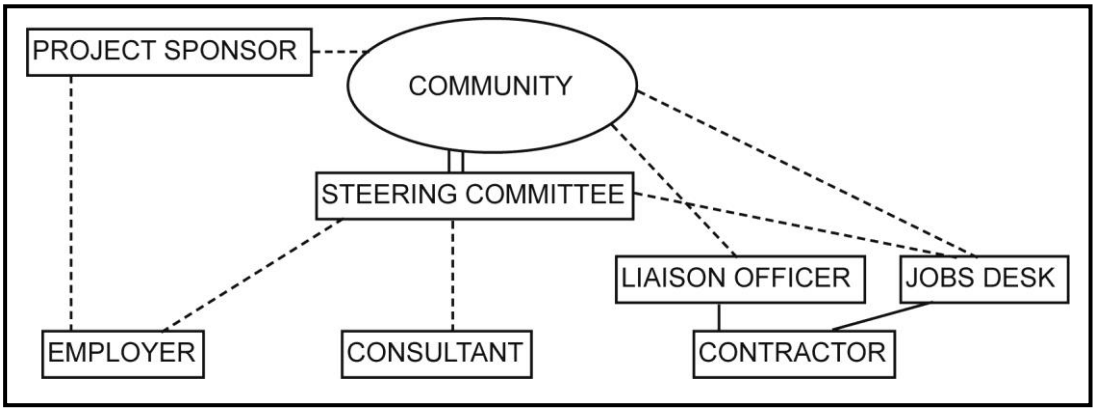

Figure 4 – Community / Project Relationship

3. Reasons for Enabling Participation

Here are some good reasons for encouraging and enabling participation when dealing with a community project:

- More will be accomplished
- Services can be provided more cheaply
- There is value for participants
- Participation is a catalyst for further development
- It encourages a sense of responsibility
- It guarantees that a felt need is involved
- It ensures that this is done the right way
- It uses valuable indigenous knowledge
- It frees people from dependence on the skills of others
- It means that the project will be designed around the real needs
- It equalizes status
- It draws out talents, leadership and mutual respect

4. Factors Contributing to Participation

Some factors which can contribute to participation and a sense of belonging and importance within the group are the following:

- A name gives the group identity
- A meeting place and regular meetings
- The size of the group must be kept to about 15 people. Very large groups are very difficult to work with. Small groups ensure that all members must be active and participate
- Conflict must be kept to within reasonable limits so that the group stays together
- There must be continuous good communication within the group
- The group must have a mission and goals to keep it purposefully active
- Approach the members of the group with respect and humility
- Show interest in others' ideas and knowledge

Be aware in your dealings with the community and project participants that, wherever possible, you help people to participate.

5. Urban/Peri-urban projects VS Rural projects

The approach required by planners in urban and rural projects should be informed by some possible differences between the communities in these areas. The following are the areas in which differences can exist in urban and rural communities in terms of LIC projects:

- Expectation of wage level
- Expectation of sophistication of contract
- Expectation of independence

- Expectation of an acceptable standard of service
- Expectation of the overall performance of the contractor
- Awareness of its rights by the labour force
- The understanding of a daily wage system not directly related to performance/productivity
- In an urban area the labour force may be drawn from areas beyond the immediate contact area and the perceptions of local residents may be different from those seeking employment
- The politicizing of expenditure as well as the influence of local criminal elements set on benefiting from the cash inflow can have an effect on the ability of the Consultant and Contractor to control the situation

THE ROLE OF THE PROJECT STEERING COMMITTEE!

1.4.2 THE ROLES OF THE PROJECT STEERING COMMITTEE AND THE COMMUNITY LIAISON OFFICER

Prior to the commencement of construction, the community representatives and the project sponsor should jointly choose a steering committee. As the Steering Committee will meet frequently, people chosen to serve upon it must have the necessary time available. Duties of the Steering Committee will be:

- To advise the contractor on all matters pertaining to the community
- Public relations and communications
- Setting up the conditions of employment at the start of the project (note that these must be incorporated into the tender documents)
- Labour disputes
- Any other matters that the community representatives and project sponsor agree between them.

The Contractor should appoint a full-time **liaison officer**, who should have a sound knowledge of the LI process and required outcomes, especially those pertaining to the local community. The liaison officer must bridge the link between the Contractor and the Steering Committee.

Training of the Steering Committee members in the functioning of a committee is essential and in other matters optional. Communication in both directions is essential for the smooth running of the construction project. Labour problems must be dealt with promptly and efficiently and the help of the Steering Committee members may be found to be important in minimising potential conflict.

As milestones are reached during construction of the project, it is wise to inform the Steering Committee and to invite them to participate in celebrations. Acknowledgement must be made of the role of the members of the Committee in each step to a successful conclusion of the project.

1.5 THE CONCEPT AND IMPLEMENTATION OF INTEGRATED ENVIRONMENTAL MANAGEMENT IS EXPLAINED

Learning Activity Outcomes

This section of Assessment Criteria will enable you to:

Understand and be able to explain practical conservation issues with regard to Labour-intensive road construction.

INTEGRATED ENVIRONMENTAL MANAGEMENT IS DESIGNED TO ENSURE THAT THE ENVIRONMENTAL CONSEQUENCES OF ANY DEVELOPMENT PROPOSAL ARE UNDERSTOOD AND ADEQUATELY CONSIDERED IN THE PLANNING PROCESS. ENVIRONMENTAL MANAGEMENT IS ABOUT HOW TO PRESERVE THE ENVIRONMENT

1.5.1 THE ENVIRONMENT

Management of our environmental resources is essential to ensure sustainable human progress and human survival. It is impossible to separate economic development issues from environmental issues. Many forms of development erode or use up the environmental resources upon which they are based. Environmental degradation can undermine economic development. Poverty is both a major cause and effect of global environmental problems. Rising poverty and unemployment have increased pressure on environmental resources as more people have been forced to rely directly upon them.

Here are some typical local examples:

- Firewood: people who cannot afford electricity or paraffin for cooking have to use firewood. Look around you. Where have all the trees gone? When the few trees that are left now have been used up as firewood, what is the poor then going to use? Look also at the land where the trees were: can you see the erosion?
- Where have all the cattle gone? There are not many cattle left in the area. Why? Grazing is poor and insufficient for cattle. So what do people do for food and earrings instead of husbanding cattle? They breed goats. Have you noticed the effect of the goats on the land? The grass has gone, the bushes are stunted and eaten away and soil erosion is rampant. When the soil has gone, what will be left?
- The establishment of goat keeping can be seen as economic development; after all, the people now have food (goad meat) and cash from the sale of goats. However, the economic development (goat-keeping) is dependent on the grass and leaves (in the environment) that the goats can find to eat. Too many goats eat all the grass and strip the bushes of leaves so that the bushes die. Soil erosion takes over and soon there are dongas and even less grass and bush.

This is what is meant by environmental degradation caused by economic development. The lack of employment forces people to do something to earn some money.

Sustainable development implies limits. Limitations are imposed by the present state of technology and social organisation on environmental resources. Going beyond these limits causes environmental problems.

Sustainable development is about meeting present needs without comprising the future.

ANY PLANNED DEVELOPMENT SHOULD NOT DAMAGE THE ENVIRONMENT DURING ITS CONSTRUCTION OR THEREAFTER THROUGH NEGLECTED MAINTENANCE, OR AS A RESULT OF ACTIVITIES MADE FEASIBLE AND PROMOTED BY THE DEVELOPMENT. RATHER, THE DEVELOPMENT SHOULD PROTECT THE ENVIRONMENT. IN CASES OF EXPECTED NEGATIVE ENVIRONMENTAL IMPACTS, ACTION MUST BE TAKEN TO MITIGATE THESE

1.5.2 PRACTICAL APPLICATION OF CONSERVATION PRINCIPLES

Some of the environmental impacts of a roadway are:

Construction impacts:

- Destruction of natural vegetation, disturbance of the drainage patterns, visual impact of borrow pits, dust, noise, air pollution from engine exhausts, pollution of the soil by oil and fuel spillage, creation of temporary construction jobs.

Long-term impacts of the roadway:

- Disturbance of the drainage patterns leading to soil erosion, visual impact of borrow pits, traffic induced dust, noise and air pollution, safety hazard of traffic to the community, improved access to the community and by the community to shops, clinics and schools, possibly a few long-term jobs in road maintenance.

The designer must see that the alignment of the road should minimise the adverse impacts upon the **natural drainage patterns** and **visible scarring** upon the land surface. Geometric standards for the road should be chosen for long-term stability and sustainability. During the design and the construction of the roadway, much care must be taken to limit potential soil erosion problems. All the storm water control measures like ditches, berms, drains and culverts must adequately protect the soil from erosion.

Likewise, the contractor must finish off borrow pits and shape them in such a way as to minimise the adverse impacts: he/she/she should spread topsoil and re-establish natural vegetation across the borrow area and re-integrate the drainage into the natural drainage pattern.

Road embankments should be planted with local vegetation, both to control erosion and to improve the visual impact.

Conclusion

Because the rural poor generally live in less fertile erosion-prone areas, their future economic well-being depends increasingly on the protection of soils and water. Protection of the environment, poverty alleviation and overall economic and social sustainability are interwoven. Protection of the urban environment is equally vital, even if the economic and social linkages are less obvious.

The use of labour-intensive construction methods is likely to lead to less destruction and more protection of soils and water than equipment-intensive methods.

The explanation for this conclusion is that the engineering design of infrastructure is a function of the chosen construction technology. In the case of labour-intensive methods for roads, the road alignment is designed to follow the natural terrain avoiding big cuts and fills and major interference with the natural drainage pattern. Geometric road standards are kept to the minimum required for the expected traffic. In the case of equipment-intensive construction, the design is different. Longitudinal movement of solids is comparatively easy, so cuts and fills are made much bigger. A few large drainage structures, which change natural drainage patterns, may represent the most cost-effective design. Furthermore, to ensure adequate manoeuvrability of heavy equipment, road geometric standards (in particular road widths) are often increased beyond what is strictly needed to accommodate traffic, causing further disruption to the natural landscape. This effect is especially noticeable in mountainous areas.

OUTCOME

2

2 OUTCOME 2: APPLY LABOUR INTENSIVE CONSTRUCTION SYSTEMS IN PROJECTS

The purpose of this Outcome is to enable you to apply Labour Intensive Construction Systems in projects

This Outcome will enable you to:

1. *Identify LIC activities for a project according to LIC principles*
2. *Perform LIC pre-planning prior to commencement of works, according to LIC procedures*
3. *Establish a site incorporating the LIC principles*
4. *Establish and agree task norms for LIC project activities*
5. *Implement LIC setting out and survey techniques*
6. *Apply systems for the measurement and recording of completed work tasks according to LIC methods*

2.1 LIC ACTIVITIES ARE IDENTIFIED FOR A PROJECT ACCORDING TO LIC PRINCIPLES

Learning Activity Outcomes

This section of Assessment Criteria will enable you to:

Understand and be able to identify the LIC activities for the project according to LIC principles.

ONLY CERTAIN TYPES OF WORK ARE SUITABLE FOR CONSTRUCTION BY LABOUR-INTENSIVE METHODS. BROADLY SPEAKING, EARTHWORKS ARE SUITABLE IN THAT THE ACTIVITIES OF EXCAVATE, LOAD, HAUL, UNLOAD, SPREAD (ELHUS) CAN BE DONE MANUALLY. HOWEVER, AS HAULAGE IS GENERALLY DONE BY WHEELBARROW, THE LENGTH OF HAUL MUST BE RESTRICTED TO ECONOMIC LIMITS. OTHER SUITABLE ACTIVITIES ARE STONE MASONRY OF ALL TYPES, PAVING, FENCING, LANDSCAPING AND PLANTING, CONCRETING, PIPE-LAYING AND BUILDING WORK. MANY OF THE ACTIVITIES CAN BE EQUIPMENT ASSISTED

2.1.1 CONSTRUCTION OPERATIONS AND ACTIVITIES

The Project Specification will lay down the activities that must be done by labour. However, based on his/her own experience, the contractor may wish to increase the labour content of the work. For this he/she/she must assess which operations can be done by Labour-intensive methods, always bearing in mind that innovative thinking can simplify construction methods and increase the portion done by labour.

For the operations that are left open, contractually, for any construction method, the following approach may be used to increase the labour content. From the bill of quantities (that usually lists the construction operations), identify all the operations that **must** be done by machine. List these separately under the heading “machines”. Look at the operations that have a labour component and split each into logical labour-intensive activities and machine activities. The criterion for deciding if labour can undertake the activity is primarily that of quality. Can labour meet the specified standard? Time constraints may be important for certain operations. If so, estimates of activity duration will be needed and some balance between labour and machine should be found.

Example of a schedule of quantities breakdown into activities

COLTO Standard Specification for Road and Bridge works states in the Bill of Quantities:

“Cut and borrow to fill, including free-haul up to 0.5km:

(a) Gravel material in compacted layer thickness of 200 mm and less:

(ii) Compacted to 93% of mod. AASHTO density”

The Bill of Quantities **must** be read together with the Specification, as the bill only summarises the pay item and **does not fully describe** what has to be done. For example, the bill item 33.01 1) (ii) "shall include full compensation for procuring, furnishing and placing the material, including excavation as if in soft excavation, for transporting the material for a free haul distance of 0.5 km; preparing, processing, shaping, watering, mixing and compacting the materials to the density specified and for removing and disposing of up to 5% oversize material from the road after processing, including transport for a free haul distance of 1 km."

- The "procuring and furnishing" of borrow material includes compensation payment to the land owner, the clearing and grubbing of the borrow area and final shaping, top soiling and closing down of the borrow pit.
- "Excavation as if in soft excavation" means that payment is made for excavation defined as "soft only" and soft excavation is defined in terms of machine performance.
- "Transporting the material for a free haul distance of 0.5 km" means that the rate paid for the operation must include the cost of loading the material into suitable vehicles and transporting it for a distance of 0.5 km (measured one way only) and must include the cost of the return trip. Extra money will be paid if the transport distance is >0.5 km and is the subject of a separate rate.
- "Removing and disposing of up to 5% oversize material from the road after processing" means that the cost of removing up to 5% of the layer volume in oversized stones and rocks and transporting them up to 1 km must be included in the rate.

Having read the Bill item and that part of the specification that it refers to, the operations of "cut to fill" and "borrow to fill" can be broken down into activities.

Cut to fill

Activities are:

1. Excavate in the cutting in firm material (contractor must decide if the material is "soft" soil or gravel, as the productivities are different). Note that payment is made in final compacted m^3, so the shrinkage of the material must be included in the quantity calculation
2. load into transport (contractor must decide what transport he/she/she can use, as both cost and loading productivity depends on the vehicle and its height) and move material for 0.5 km. Note that payment is made in final compacted m^3, so the bulking of the material transported must be included in the quantity calculation
3. unload and spread the material
4. water, mix and shape the material (include the cost of water)
5. initially compact, re-shape and finally compact the layer
6. remove oversize stones and stockpile
7. load the stones into transport
8. transport stones up to 1 km

9. unload the stones onto a dump
10. trim cutting slopes

As an exercise, list the activities required for “borrow to fill”, carefully reading the specification clauses and noting that clearing and grubbing of the borrow area as the final trimming and closing down of the borrow area must all be included in the work.

Once the activities are listed, suitable task norms can be chosen for each activity, relevant quantities can be calculated and either time or labour can be calculated.

2.1.2 PERFORMANCE MEASUREMENT BASELINE TOOLS

For the purposes of monitoring and controlling a project it is suggested that the LIC operations or LIC activities within an operation be kept distinctly separate in the Scope of Works and BoQ. This should aid the reporting process and would help to identify conclusions, recommendations and lessons learnt when completing the project closeout report. This then should form part of the Management Systems of the business when recorded on database and used as historical data for future projects.

Project Objectives	**Performance Measurement Baselines (one or more or all)**	
	Conventional operations	**LIC operations**
Time	Project schedule/ Barchart/ Gannt chart [Activities & operation over time]	Helps with sequencing of activities (simultaneous or sequential) and obtaining the actual total time for completion of LIC activities and operations
	Precedence network diagram (PND) [Activities & operation over time]	Optional unless operation is complex
	Resource histogram (time and human resources – request is availability	Labour component guided by: • Team balancing schedule (activities within an operation); and • Team balancing schedule (operations within project)
Cost	Total Project budget [Cost of Operations and activities over time]	LIC total of overall project budget
	Cash flow forecast/ projection [Cost of Operations and activities over time]	LIC cash flow forecast/projection

Table 1 – Performance Measurement Baseline

2.2 LIC PRE-PLANNING IS PERFORMED PRIOR TO COMMENCEMENT OF WORKS, ACCORDING TO LIC PROCEDURES

Learning Activity Outcomes

This section of Assessment Criteria will enable you to:

Understand the need for pre-planning, apply LIC principles during pre-planning of a LIC project, and be able to use the information gathered.

IT IS ONE OF THE ROLES OF THE CONSTRUCTION MANAGER (OR SITE AGENT) TO UNDERTAKE THE PRE-PLANNING OF THE WHOLE CONTRACT BEFORE THE START OF CONSTRUCTION

This leading activity will teach you how to set up all the controlling systems prior to you starting a new construction project. You will use the skills already learnt, such as programming the works etc., and build on these to create a comprehensive set of site management tools to strengthen your ability to make effective and accurate decisions based on current and realistic data.

2.2.1 PRE-PLANNING

This activity covers the essential function of planning the contract and setting up the Management Information Systems, for monitoring the works, prior to starting actual construction. As part of this planning process, you will undertake the following:

1. Do a more detailed site investigation
2. Check the tender sheets, in terms of resources, production and allowable unit costs
    - Identify LIC activities
    - Establish task norms
3. Set up the construction programme and cash flow
    - Set up a site establishment programme
    - Extract resource schedules (labour, materials, plant) from the programme
    - Set up a P&G Time Related schedule of monthly allowables and costs.
4. Set up a site organisation chart or organogram
5. Set up Management Information Systems such as:
    - Daily diary
    - Activity list
    - Haulage returns
    - Daily supervisor's return form
    - Production and unit cost graphs
    - Quality control laboratory testing and results sheets
    - Materials control forms
    - Drawings control register
    - Etc

Normally there is little time available to do the pre-planning for a contract, but the eventual success of the project depends to a large extent on how well and thoroughly you set up these systems. Your ability to monitor and control the contract depends on these systems.

It is good practice to formalise this pre-plan, and to include other staff inputs in the exercise, to produce a Pre-plan Document. This forces you to produce all the necessary management tools you will require and allow you to check against your pre-plan during construction.

1. Detailed site investigation

You need to obtain **more detailed information** about the construction site, and an area of at least 10 km around the site. It is also possible now to obtain better materials and sub-contractor prices from new knowledge of the local conditions.

Investigate the site with new eyes to looks for opportunities and attempt to quantify any risks to be able to manage them better. Any revision in your planning to achieve lower costs, better or faster work methods, or production rates, will ensure higher profits when you actually do the work.

In your investigation, you should do detailed soil investigations, such as test pits on a grid system in borrow pits and trial holes on the side of cuttings or excavations. This information will assist in achieving better utilisation of your recourses and quality control of the natural materials used in the project.

Samples should be taken at this stage of all materials you are to use, including water samples for use in concrete. Involve the Engineer, and try to get payment for this sampling and testing, as he/she/she will probably need this information as urgently as you do. Outside accredited laboratories will probably have to be found to undertake the testing.

Other points to cover during this detailed site visit:

- Compile a draft activity checklist of the contract.
- Check conditions under which you will have to carry out each activity of the contract and record in your notebook the most important features you discover.
- Before you attend the site inspection, prepare a list of important issues to check so that you do not have to revisit the site.
- Prepare a strip map of the road plus sketches of the important details. Take all relevant measurements such as an existing cross-section, camber and ditch size.
- Ask local people about weather conditions, soils and labour availability.
- Write down all the features you think may affect the work.
- Investigate possible locations for site camps, including the Employers existing facilities. Inquire about the costs of renting a piece of land on which to establish a camp.

- Visit the designated quarries and assess the following:
  - ✓ The quality and variability of the material
  - ✓ Plans for exploiting the quarry. Prepare an outline sketch of the quarry with all the important features such as where to place overburden and where to stockpile gravel. Include the volume of material to be excavated and hauled
  - ✓ The environmental requirements such as soil erosion caused by the work and rehabilitation of the quarry using overburden at end of the job
  - ✓ The condition of the haul road and its maintenance or rehabilitation requirements
- Notify the Employers of any tender document omissions you discover in order to get clarity on such issues as work standards that are not clearly defined or activities which are missing or described vaguely

2. Check the Tender Information

The information gathered in the Detailed Investigation of the actual site conditions, needs to be used to amend the tender, if necessary. You should analyse the breakdown of each activity's tendered rate and amend it to incorporate the revised methods, costs, and production rates. Decide how each work activity is going to be done and with what resources (especially where LIC methods are to be used).

Check all assumptions made during tendering and try to simulate the real situation more closely with the additional information. These revised allowable unit costs and production targets will form the basis for your revised programme and budget.

3. The Programme

The construction programme (in bar chart format), sets out the order of your main items of work, and shows the relationships between them on a horizontal timescale.

Each work activity is plotted so that you can see easily when it starts, how long it is to take, and when it is likely to be completed.

To produce the construction programme you should follow these steps:

1. Identify what the main activities are
2. List these activities in the order in which they are to be done
3. Work out the time it will take to do each activity by dividing the total quantity by the tendered production rate per day to give the total number of days
4. Plot the activity as a horizontal bar starting on the day that the activity is likely to be able to start
5. Plot each activity in the same way, usually starting after the previous activity has ended.

In this way, the overall planned completion date can be established, based on a realistic sequence of linked activities.

The construction programme is a powerful management tool to be able to start each new activity on the project correctly, with the right resources, on time, and can be monitored, controlled, improved, and continuously checked against the original programme.

This programme forms the basis of all the other programmes that we need to produce to manage different aspects of the project, such as the Fixed and Time-related P&G schedules, and the Resource Schedules (plant, labour and materials). It is also used to produce the cash flow and budget.

4. Resource Schedules - Labour

From the construction programme, allocate your various categories of labour required by the different work activities. Add the quantities of each category of labour vertically downwards, to obtain totals for each month. This spread of numbers of resources, can be plotted for each month to produce a labour histogram. Information contained in this histogram is invaluable for planning purposes and for recruitment and demobilisation of contract-based labour. It can also be used to “level” the resource that has peaks that are not practical. This can be done by rescheduling one or more of the relevant work activities so that this concentration of labour is reduced.

5. Resource Schedules - Material

As was done for the labour, allocate the required materials for each of the work activities and for each different type of material consider the following:

- When do you require information from the Engineer to be able to place an order for this material?
- How long does the manufacturer need to make the material or is it ex stock?
- When must you place the order or requisition to order?
- When should this material be delivered or at what intervals and quantities?
- Where should the material be off-loaded or stored and what preparation is required before it can be delivered?
- What equipment or labour is required on delivery e.g. crane, labour team?

All these key dates should be shown on the schedule and possibly even included in the main programme for the Engineer. Delays in receiving information from the Engineer can then be suitable grounds for later claims for extension of time.

6. Materials suppliers

Materials suppliers should be given copies of the relevant sections of this schedule, with their orders, so that they can be held to the key dates. This is your strongest form of control on suppliers to ensure that your materials are on site on time. Careful thought should be put into this schedule in order that it becomes a good management tool that can be constantly reviewed, updated and used in discussions with suppliers.

7. Resource Schedules – Plant and Equipment

Develop a plant and equipment schedule from the construction programme by allocating the required plant from the tender sheets, to each activity. For complex projects, it is advisable to produce histograms for each plant resource so that over-allocation problems can be eliminated. This schedule is used later during construction, to allow for "lead-in" times, so that plant can be requisitioned and transported to site to be ready when each new activity needs to start, as well as when it is likely to be removed from site. This information may also be useful when negotiating with plant-hire companies to obtain better hire rates for longer periods of hire.

8. The organisational Chart

Draw up an Organisational Chart or Organogram, which shows clearly the organisational structure of the project, and the levels of responsibility for all the site staff. This chart shows the lines of communication and may help monitor and control the movement of labour between teams. Ideally, the organogram will include people and organisations outside the contractor's company, such as:

- The Client
- The Engineer and the Engineer's Representative
- The Clerk of Works
- Other Engineer's inspectors and staff
- The Project Steering Committee
- The Community Liaison Officer and Labour Desk
- The Contractor's Site Agent
- Site Supervisors and Team Leaders and teams

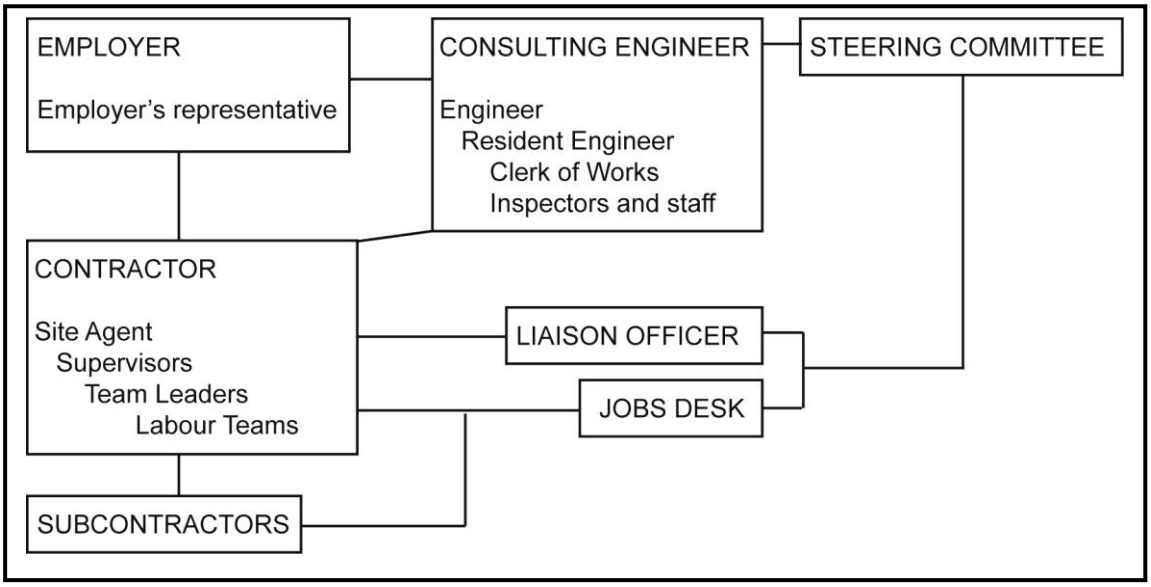

Figure 5 – Organisation Chart

Try to include both the position within the organisation, and the specific person's name, so that it is clear who needs to communicate with whom for which portions of the Works.

9. Set up the management information

Plan, organise and initiate the various systems that will be needed to control information and its flow during the contract.

2.2.2 INVESTIGATING COSTS

1. Direct Costs

Direct costs are costs that occur DIRECTLY as a result of the work on the project or activity. Some examples of direct costs are given below:

- Direct management cost. For example, the salary of the contractor if he/she/she has a number of teams working for him/her and is managing them.
- Direct labour cost. The cost of wages of the workers.
- Direct material costs. The cost of materials used to complete the project. An allowance should be made for wastage and scrap.
- Direct equipment costs. The cost of new tools or machinery purchased.
- Direct expenses. The cost of services bought in. For example, plant hire or sub-contractor fees.

2. Indirect Costs: Fixed and Variable

These are also called overheads. They are costs that are not directly related to the particular activity or project. They are costs that occur no matter what the project is, such as cleaning and rents. Also included in these INDIRECT costs are costs that may be incurred whether the project is executed or not.

Here are some examples of indirect costs:

- Indirect management costs. If the contractor has employed a supervisor on each site then the salary of the contractor becomes an indirect management cost as the contractor is not directly involved on the site.
- Indirect labour cost. This includes the costs of those staff not directly involved with the construction of the project, e.g. the salaries of the cleaners, security.
- Indirect material costs. Cost of cleaning material, stationery and maintenance parts.
- Indirect equipment. Computer, photocopier, telephones etc.
- Indirect expenses. Training, insurance, rent.

Another way of looking at indirect costs is to sub-divide them into **FIXED** and **VARIABLE COSTS**. Fixed costs are those that do not fluctuate with the workload, such as rentals and rates. Variable costs do fluctuate with the job size. For example, if a lot of work is taken on the contractor may need to employ more secretaries. Lighting and telephone costs would also increase.

3. Labour Costs

This is the cost of employing labourers, i.e. people actually involved in the construction. In LIC it is not the cost of the wages only - also add up all the days likely to be lost per month due to training time, etc.

4. Material and Equipment Costs

This is the cost of materials used on the project and is therefore a direct cost. This cost is obtained from the priced BoQ. The material and equipment cost can be sub-divided into the following 4 cost factors:

- Material used on the project
- Consumables that could be used on a number of projects, such as paint, nails, wire
- Handling of the material
- Wastage and scrap

Obtaining the materials takes time and may involve travelling to different suppliers and therefore incurs a cost. It is normal practice to increase the costs of materials by 10% to 20% (because of potential transport problems to and from some rural areas it would be advisable to top up by about another 5 to 10% depending on the situation or circumstances) to cover the following:

- Purchasing
- Expediting (following up on the order)
- Transport
- Material handling (off loading and storage)
- Acceptance and inspection of goods delivered
- Storing (issuing and stock control)

Equipment costs generally relate to manual and mechanical equipment that is required to complete the project. These may include the following:

- Office equipment, e.g. computers, fax, telephone
- Site equipment, e.g. vehicles, hand tools, scaffolding
- Shop equipment, e.g. machines and special tools

Equipment can be obtained by purchase, plant hire or lease as follows:

- **Purchase:** The equipment can either be new or second hand. Buying equipment is a CAPITAL INVESTMENT for your business. You get TAX CONCESSIONS and a DEPRECIATION ALLOWANCE from the Receiver of revenue for capital investment, which reduces the cost. Insurance, maintenance and repair costs will have to be included in the budget.
- **Plant hire:** Equipment is more expensive if hired by the hour but the advantage is that the contractor only pay for the time that the machine is actually working. You do not have to pay DOWN TIME, insurance or maintenance but you will have to pay the transport costs to the site.
- **Leasing:** Equipment can be used now and paid for later

5. Transport Costs

Goods purchased from a supplier will normally be delivered at a cost to the purchaser. The transport cost will obviously depend on the vehicle used to transport the material and the distance travelled.

6. Preliminary and General (P&G)

These are costs that cannot be easily assigned to an activity or task. Some examples are as follows:

- Site supervision: the wage of the supervisor or of the contractor if he/she/she is doing the supervision himself
- Insurance
- Site establishment: toilets, stores hut
- Site security: night watchman
- Site services: water, electricity
- Scaffolding
- Accommodation
- Travelling expenses to site
- Material handling: Receiving, inspection, off-loading, storage and keeping records
- Removal of waste and scrap

When working out these costs make sure that you add on a percentage for profit. Also check that they are not being paid for elsewhere, e.g. the Employer may be paying for insurance.

2.3 A SITE IS ESTABLISHED INCORPORATING THE LIC PRINCIPLES

Learning Activity Outcomes

This section of Assessment Criteria will enable you to:

Understand and be able to carry out the site establishment of a LIC project according to LIC principles.

CONTRACTOR'S SITE ESTABLISHMENT INVOLVES THE SETTING UP OF ALL THE FACILITIES THAT WILL BE NEEDED FOR THE EFFICIENT FUNCTIONING OF THE CONSTRUCTION PROGRAMME. IT INCLUDES OFFICES, STORES, WORKSHOPS (IF THE PLANT AND EQUIPMENT PLANNED FOR THE SITE WARRANT IT) AND ACCOMMODATION FOR NON-LOCAL STAFF. IT ALSO INCLUDES SETTING UP MONITORING AND CONTROL SYSTEMS AND ESTABLISHING CLOSE CONTACT WITH THE COMMUNITY AND THE STEERING COMMITTEE

2.3.1 SITE ESTABLISHMENT

Establishment on site should be viewed as a whole project on its own, as it must be planned properly and controlled so as not to go over the allocated time and budget. Often, we tend to overlook just how much work is involved in establishment and this can negatively affect our contract.

It is important that the site camp is planned and laid out correctly, including for the connection of services such as sewer and water. A camp sketch should be made to simplify the planning and to include as much information as possible.

The establishment of the Resident Engineer's facilities is also important, as these are paid billed items and the Engineer may hold back payment if his/her establishment is not done completely within programme and to his/her satisfaction. Try to incorporate the Engineer's offices and facilities close to your own for ease of working and to improve the communications and relationship with the Engineer's site staff. Look at the possibility of sharing facilities (and costs!) with the Engineer, such as laboratories and ablutions. It is useful to make up a checklist before the start of a contract, to make sure that important aspects of the start-up are not omitted. As you proceed with the establishment, you can monitor what needs to be done against this checklist and against the establishment programme.

1. Site layout

Studies have shown that up to half the man hours expended on a building site are concerned with the movement and handling of materials. Much of this time could be saved, leading to greater productivity and lower costs, if the site layout was planned from the start of the job to minimise unnecessary movements.

The key factors in designing an efficient site layout are:

- Access roads
- Water and other services
- Materials stores and stockpiles
- Placing of plant and equipment

2. Materials, Stores and Stockpiles

The positioning of store sheds and stockpiles should be carefully planned, so that materials will be available as close as possible to where they are to be used, but also in such a way that they will not interfere with building operations or block accesses.

Valuable items should be stored in locked sheds.

Aggregate stockpiles should be stored as close as possible to the area where the concrete will be mixed. Make sure that there will always be good road access through the site to the storage area, so that materials and components can be unloaded directly from delivery trucks without unnecessary handling or transport.

Remember 'materials on site' are the property of the Employer, so he/she/she has a right to expect that his/her possessions are stored and handled with due care and attention.

3. Simple Strip Map with Quarry Locations

It is important that you have a clear picture of the situation of the road you have to gravel, the quarry or quarries that you need to haul the gravel from, including their potential gravel volume, and the quarry access roads.

It is sometime useful to prepare a sketch especially when you have to operate from more than one quarry. This can be a simple strip map with the most important data included.

Quarry 1:

- Allows 5.500m of gravelling
- Aver. Haul distance = 3.525km

Quarry II

- Allows 12.000m of gravelling.
- Aver. Haul distance = 7.050km

Quarry III

- Allows 3.000m gravelling
- Aver. Haul distance = 1.380km

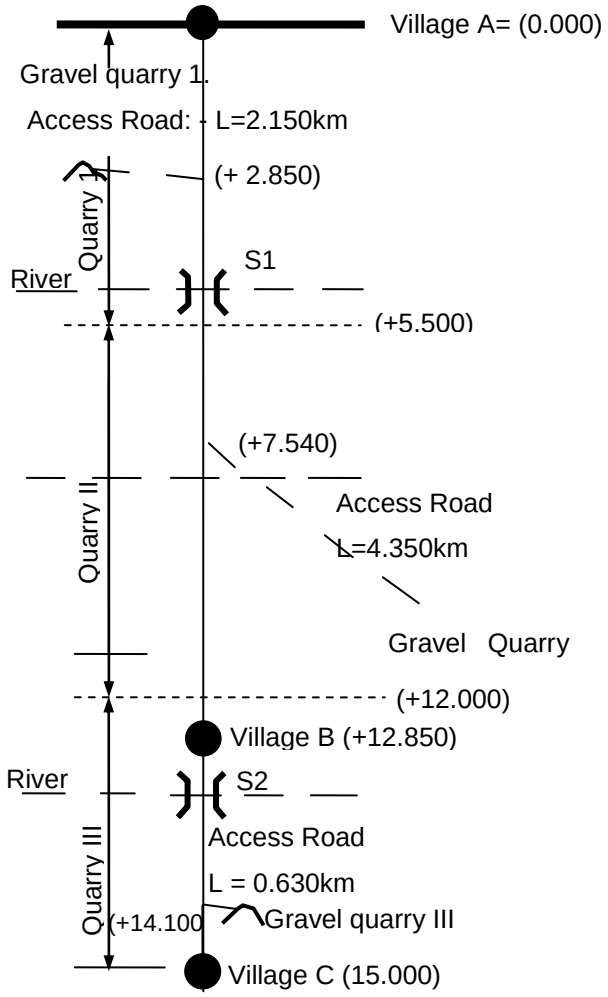

2.4 TASK NORMS ARE ESTABLISHED AND AGREED FOR LIC PROJECT ACTIVITIES

Learning Activity Outcomes
This section of Assessment Criteria will enable you to:
Understand the task system
Establish and obtain agreement on task norms for the LIC activities for the project
Apply and manage the task system on the project.

2.4.1 INTRODUCTION

There are 3 types of payment for production (daily, task and piece) as follows:

1. Daily
The labourer is paid a fixed daily wage regardless of output. Under daily paid conditions, it is unlikely that high levels of productivity will be obtained.

2. Task
Using the 'task' system the labourer is paid for satisfactory completion of a 'task' that has been set by the site supervisor and agreed with the labourer. When the task has been completed to the satisfaction of the site supervisor, the labourer may leave the site. Payment for the task is usually the same as the 'daily wage'.

The task for any particular activity can be determined by a Work Study. Using these methods, task rates have been determined for many rural road construction activities. Task rates vary significantly depending upon soil type and condition and it is recommended that task rates should be determined for activities in different sub-sectors of Civil Engineering (via pilot projects).

In most cases, task rates have been determined assuming an 8-hour working day. In practice it has been found that a task set for 8 hours is usually completed within 6 hours. This is one of the reasons why the task cannot reasonably be considered exploitative (a task is what an average person can do in an average day). If the worker completes a task in much less than 6 hours, then too low a task has been set (and vice versa). In most rural road work, individual tasks have been specified. However, it has also been found that group tasks may be used.

It must be stressed that not all the work is suitable to the setting of tasks. In PWPs normally only one (1) task/day is allowed because of the regulations laid down by the Minister of Labour.

3. Piece Work

In the 'task' system the labourer is paid for the task but only one task is completed per work per day. In the 'piece' system the labourer may complete more than one task per day and is paid for each completed task. E.g., if the rate for one task is R120 and the worker completed 2 tasks in a day, then under the piece system the person will be paid 2 x R120 = R240.

4. Comment

There is a distinct improvement in productivity as one moves from daily through task to piece rates. Proportionately the improvement is greatest when one changes from daily rates to task rates. E.g., excavation productivities under the daily paid system may be as low as 0,12m^3 per day for a particular type and condition of soil, whereas using the task system productivity may easily be raised to 3m^3 per day (over 2 000% improvement).

Using the piece system it has been found that 9m^3 may be achieved (200% improvement to task rates). Using this data the ratio of productivities, daily to task to piece, would be 1:25:75. Proportionately the greatest increase is from daily to task.

Several factors must be borne in mind when considering the use of daily, task or piece rates. It has been found that much better organisation is required as one moves from daily through task to piece rates. Most of the DPW Works have been based upon the task system.

Using the piece work system it is not so clear that neither exploitation nor self-exploitation is taking place. The Construction Manager should keep a check on the physical condition of the labourers.

There are certain operations that are very suited to the setting of "task" or "piece" rates, such as trenching or bulk excavation. Other operations have not been so suitable to construction using "tasks".

In relation to rural roadworks in hilly terrain about 60% of the work has been carried out by setting tasks, the balance being paid daily. In flat terrain it was found that group tasks had to be set. Under the conditions, the better trained and motivated the Site Foreman and Site Supervisor the higher the output.

A DAILY TASK IS THE AMOUNT OF WORK ONE PERSON CAN DO IN ONE DAY, TO THE QUALITY REQUIRED. ALTERNATIVELY, "A TASK IS WHAT AN AVERAGE PERSON CAN DO IN AN AVERAGE DAY"/ ONE DAILY TASK IS PAID WITH ONE DAY'S WAGE. A RECORD IS KEPT OF THE NUMBER OF TASKS THAT ARE COMPLETED IN ONE PAY CYCLE (USUALLY TWO OR FOUR WEEKS) AND THE PERSON WILL BE PAID FOR THE TASKS COMPLETED. ON MOST LABOUR-INTENSIVE CONSTRUCTION SITES ONLY ONE TASK WILL BE PERMITTED PER DAY

2.4.2 THE TASK SYSTEM

The principle of “no work, no pay” or “a fair day’s wage for a fair day’s work” should form the basis on the task system. In general, on most projects, each worker is allowed to do only one daily task per day and is allowed to go home when the task is done. Some projects set weekly tasks, calculated from acceptable daily tasks sizes; some projects set group tasks, again calculated from acceptable individual tasks.

For the worker the most important reason for using the task system is that the productivity is higher when work is measured and paid for as tasks than when workers are on a daily wage. In addition, the task system links pay to production, making costing more certain.

1. Standard tasks

The tasks in **Table 2 – Standard Tasks** are “standard tasks” for standard work conditions per person per day. If the circumstances of the work are different, the task size should be different. For this reason tasks are often given as a range of productivities, for example 3 to 4.5 m^3/md. New and inexperienced workers should be given the lower task size, while experienced workers will be able to complete the higher task size. The given range also gives some guidance on what can be expected for relatively small changes in site conditions.

Agreement on the size of the tasks must be obtained from the community and the workers, before work is started. It is no good telling a person that a task comprises 1.5 m^3 if the person does not have any idea how large 1.5 m^3 is. One good way of showing the size of the task is to have a short section of a ditch dug in the ground beside the training centre. The ditch should be to the dimensions and finish needed on the project and the size of the excavation should be exactly one task (say 4.00 m^3 in volume). The heap of loose soil should be moved a certain distance away (the same distance as soil will be moved on the project) to a stockpile. The size of the stockpile should be adjusted so that it closely represents the volume of loose material that should be transported by wheelbarrow as one task. Note that the task for wheelbarrow haulage depends on the haul distance. Other tasks can be illustrated in a similar manner. Community members and workers will then be able to see what each task entails. As soon as a binding agreement is reached, the task must be recorded in such a way that anyone can confirm it.

On the project each group leader must be able to set a fair task. This will take much practice. At first the team leader will have to discuss with the Supervisor how the task size should be adjusted whenever there is a change in conditions, but with practice, the team leader will know how the adjustments should be made. You should instruct both the supervisors and the team leaders on how you wish tasks to be applied in practice.

For example, if the excavation is in firm soil that gets hard as soon as the hole is more than say 250 mm deep, then the task should be made less to suit the very hard soil in the lower part of the excavation. In other works, an average task size should be selected to suit the site conditions.

2. Balancing

Task work needs to be balanced, that is, groups of workers need to work at similar speed so that no portion of the work lags or leads the rest by too much. This is particularly important when one group of workers produces something for the other groups to use. For example, borrow excavation must keep ahead of loading and transportation of the borrow materials, and these in turn, must keep ahead of spreading and compaction operations.

Table 2 – Standard Tasks

ACTIVITY	TOOLS	TASK
Bush clearing	Axe, saw, rope	Medium dense bush (4 to 7 bushes per 100 m^2) – 350 m^2/md Dense bush (10 to 15 bushes per 100 m^2) – 200 m^2/md Very dense bush (20 to 30 bushes per 100 m^2) – 100 m^2/md
Grass clearing	Slasher, spade, hoe, fork, rake	Dense grass 85 m^2/md
Stripping ground cover and grubbing out roots, haul to nearby dump and spread	Pick, shovel, fork, rake	Light vegetation, dig to 50 mm deep – 150 m^2/md Medium vegetation, dig to 100 mm deep – 75 m^2/md Heavy vegetation, dig to 150 mm deep – 40 m^2/md
Grubbing out roots to 250 mm deep	Pick, shovel, fork, rake	Dig soft ground to remove roots – 42 m^2/md
De-stumping (removal of stumps and large roots)	Pick, shovel, axe	Medium dense bush – 60 m^2/md
Removal of bush and tree cuttings	Bush hook, rope, axe, saw	Cut, bundle and load branches, tree trunk pieces, other vegetation – 8 m^3/md
Boulder removal	Crowbar	Daily paid
Excavation (measure in place)		Throwing distance Up to 4 m 4 to 6 m
Loose soil	Shovel	5 to 6 m3/md 4.5 to 5 m3/md
Sticky soil	Spade, fork, forked hoe	2 to 3 m3/md 1.5 to 2 m3/md
Firm soil	Pick, shove, spade, hoe	3 to 4.5 m3/md 2.5 to 4 m3/md
Hard stony gravel	Pick, shovel, crowbar	1.5 to 2 m3/md 1 to 1.5 m3/md
Loading (measured loose) into:	Shovel	Loose soil or gravel:
Wheelbarrow		12 to 15 m^3/md
Trailer		7 to 10 m^3/md
Truck		4 to 6 m^3/md

ACTIVITY	TOOLS	TASK	ACTIVITY
Wheelbarrow haul (measured loose; haul and unload only)	Wheelbarrow (note production increases 20% for good haul route and decreases 30% for poor haul route	Equivalent haul distance – length +10(rise +fall) 20 m 40 m 60 m 80 m 100 m 120 m 140 m 160 m 180 m 200 m	Production in loose m^3/md over average haul route 4.44 3.16 2.44 2.00 1.70 1.44 1.28 1.15 012 0.95
Levelling roadbed (measured loose)	Shovel, spreader	60 m^2/md	
Picking loose material (bank m^3)	Pick, shovel, fork	40 m^2/md	
Spreading loose material (loose m3)	Shovel, spreader, hoe	Soil 12 loose m^3/md Gravel 10 loose m^3/md	
Watering, mixing, spreading and levelling	Shovel, spreader, hoe, string-lines, water bowser	Sandy soil 4.5 m^3/md Gravel 3 m^3/md (measured tight after compaction)	
Compaction and re-levelling	Roller, string lines, straightedge, shovel, spreader	Depends upon chosen roller (see below)	
Compaction by pedestrian-controlled double drum vibrating-roller	"Stampede" rollers: R75/50 S R90/55 S	Mass Kg / Passes / Layer / Output 980 / 5 / 100 mm / 8 m^3/h 1 350 / 4 / 100 mm / 12 m^3/h(tight)	
Loosen material in trench with pneumatic tools	Compressor, pneumatic tools, team of 4 people	Intermediate 19 m^3 for team Rock 12 m^3 for team	
Screen bedding material	Sieve, shovel	7 m^3 loose /md	
Offload flat-bed truck or trailer	Shovel	15 m^3 loose /md	
Trench backfill, hand compaction	Shovel, spreader, hand-stamper, watering can	Backfill, compact, clean-up and load spoil 4.5 m^3/md	

ACTIVITY	TOOLS	TASK
Collecting loose stone	Gloves, wheelbarrows	Up to 20 m 2.5 m^3/md 20 to 50 m 2.0 m^3/md
Quarrying, prying out cracked rock	Crowbar, gloves, sledgehammer	Up to 20 m 0.5 to 1 m^3/md
Rock crushing	New Dawn Engineering hand-turned rock crusher, shovel	0.35 m^3/md (depends on size of feed-stock and size of product)
Backfill trench and compact	Shovel, watering can, hand stamper	2.0 m^3/md
Lay kerbing on level base	Shovel, rubber mallet, string-line, trowel, wheelbarrow	Straight 6.5 to 10.0 m/md Curved 2.0 to 5.0 m/md
Stone pitching: Plain stone pitching Grouted stone pitching	Club hammer, gloves, string-line, shovel, wheelbarrow, stiff broom, pliers, short crowbar	10 to 15 m^2/md, 200 mm thick 6 to m m^2/md, 200 mm thick 3 to 5 m^2/md, 200 mm thick
Block paving: Placing bedding sand, laying blocks, compacting, joint filling, clean up	Shovel, screed rails and beam, rubber mallet, plate compactor, bass broom, wheelbarrow, gloves	16 to 20 m^2/md
Storm water drainage pipes: Trimming, bedding, laying, backfilling, compaction	Shovel, rake, boning rods, hand stamper, watering can, rope and ground anchors	450 mm dia concrete:1.2 m/md (needs team of 10) 600 mm dia concrete: 01 m/md (needs team of 10) 450 mm dia concrete: 3.5 m/md (needs team of 5)
Concrete base slab: batch, mix, transport, pour and finish off	Batching boxes, wheelbarrow, shovel, screen beam, wood float	0.8 m^3/md (needs team of 5)
Stone masonry walls	Wheelbarrow, shovel, trowel, club hammer, string line, spirit level, batching box	01 m^3/md
Gabion work	Gloves, string-line, shovel, wheelbarrow, pliers, short crowbar	1.5 m^3/md

2.4.3 LABOUR FORCE MANAGEMENT

1. Working conditions

There is a need to avoid exploitation of workers regarding working hours and overtime rates. The existing legislation - Ministerial Determination, Code of Good Practice – Basic Conditions of Employment for Special Public Works Projects – addresses these issues.

(SEE ADDENDUMS at the back of this document)

2. Emerging Contractors

The emerging Contractor should not be restricted to working in his/her own community. The Contractor should be able to work outside his/her community to ensure continued development of his/her team and his/her skills.

- Standardisation of classification of Contractors needs to be agreed on
- A database (at local level) of emerging Contractors should be created and should include aspects such as work undertaken and in progress, capacity, etc.

3. Training for emerging Contractors

- There is a definite need to link the training of emerging Contractors to a programme rather than a project
- The development of emerging Contractors should be coordinated with the provincial department and local authority. One possibility of achieving this is for the emerging Contractors to be used effectively for the maintenance of the assets at the end of the project
- Training in cash flow management is essential for many emerging Contractors

4. Task Outputs and Setting of Task Rates

- There is a general feeling that the responsibility and risk of setting task rates should not be taken away from the Contractor, i.e. it should be the Contractor's prerogative to be able to use his/her contractual abilities to determine the task rates. The consultant may provide guidelines in the document but Contractors generally understand production levels in different conditions
- Negotiation of task rates and remuneration on the pilot projects has not been particularly effective. This needs to be improved for similar types of projects in the future
- There should be an increase in supervision and training with regard to the setting out and measurement of tasks.

2.5 LIC SETTING OUT AND SURVEY TECHNIQUES ARE IMPLEMENTED

Learning Activities Outcomes

This section of Assessment Criteria will enable you to:

Understand the survey and setting out requirements for LIC activities and see that they are implemented

2.5.1 LIST OF INSTRUMENTS AND AIDS FOR SETTING OUT

The elementary aids and instruments used for setting out are the following:

1. pegs (reference, survey and multi-purpose)
2. tape measure / measuring wire
3. ranging rods
4. boning rods
5. triangle sets
6. optical square
7. gradient template
8. straight-edge in combination with spirit level
9. abney level
10. dumpy level
11. water manometer
12. tube water level
13. camberboard
14. A-frame

2.5.2 DESCRIPTION AND FUNCTION

1. Reference pegs

They are used to mark the alignment and/or the levels of the road. Usually, they are made of wood. These pegs should have a length of approximately 40cm and a cross-section 5cm round or 5 x 5 squares. It is advisable to paint at least the top half of the peg yellow or white so that it stays visible even after a period of several months. The chainage of the road will be marked on the reference peg (chainage shows the distance from the beginning of the road). Use wax crayon or pens with indelible waterproof ink when writing on the reference pegs. Reference pegs have to be placed outside the formation of the road in order not to be disturbed during construction. Ensure that these pegs are hammered deep into the ground so that it will be impossible for children to remove them. This should be done even if it means a lot of work because reference pegs are vital during construction and very useful for maintenance afterwards.

2. Survey pegs

They show the centre-line of the road in flat terrain when no fill or cut is required. In hilly or mountainous terrain, where side-long cuts have to be made, the survey pegs show the future level of the road. When a cut has to be made the survey peg shows the limit and depth of cut.

3. Setting out Pegs

They are used to stake out cross-sections, points of the centre-line between the survey pegs, “tasks”, levels, etc. They are usually sharpened wooden sticks with minimum length of 30cm. A string line can be used to make the straight line between the pegs visible, which is especially useful with the setting out of tasks. Workers can then clearly see what they are expected to do.

4. Tape measure

A great variety of tape measures exist. The most common length of tape measure used for setting out is 30 meters. The tapes are made of steel or linen. Although the former is stronger, the numbers become illegible after a period of time.

Note that the zero point is not always located at the same place with different types of tape measures.

5. Ranging rods

Ranging rods are sticks usually 2.5 – 3.0 metres long with a diameter of approximately 2.5cm. They are made of various materials (metal, hard plastic or wood) and are usually provided with a pointed metal end. Painted alternatively red and white, they are clearly visible. The length of the red/white sections varies: 25cm, 30cm or 50cm.

6. Boning rods

These are T-shaped and of a uniform height. They can be easily manufactured by nailing a piece of wood approximately 80cm long and 10cm wide on another piece of wood approximately 130cm long and 10cm wide so that the end result looks like a “T”. A simple stand can be manufactured so that the setting-out can be done by two instead of three persons if necessary. When “level pegs” show two levels of the road “boning rods” can be used to establish a “line of sight”, which enables you to find additional levels in between or beyond the level pegs. This “line of sight” is established by putting boning rods on top of the level pegs and looking over the top of the boning rods.

The man can see that boning rod 3 is too low. When the man in the middle moves uphill his/her boning rod will come into the line of sight. He/she/she then moves his/her boning rod up (or down) until the top is at the correct height. The bottom of the boning rod is then at the required new level.

Note that this method should not be used to set out new alignments in hilly terrain, but only to find additional points between level pegs! Setting out in hilly terrain by an inexperienced person can cause excessive and unnecessary earthworks. Boning rods are one of the best methods of transferring slopes or gradients to the work.

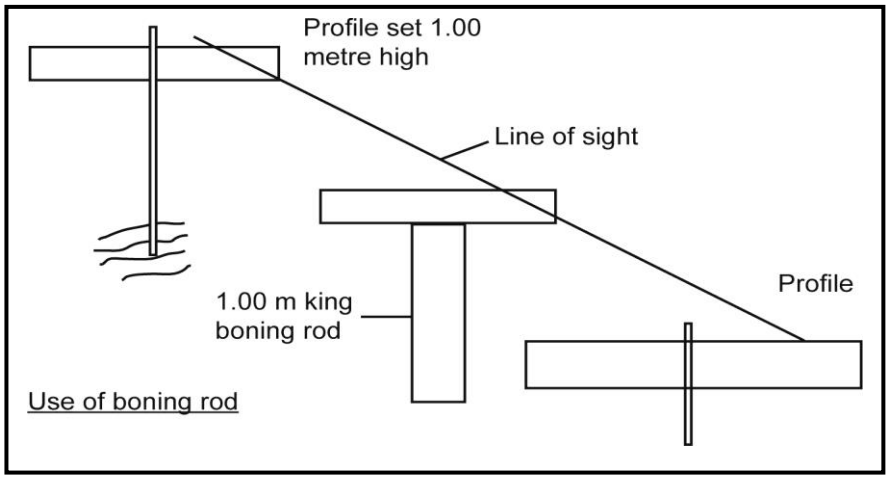

Figure 6 – Boning Rods

7. Triangle sets

These can be manufactured from three pieces of wood to show different angles. They can be used for various purposes:

- to set out a right angle to a centre-line (which has to be done when cross-sections are set out)
- to control or estimate the steepness of slopes (in this case a spirit level or plumbing line is also required)

The steepness of slopes is described as a ratio: for example a slope of 1:2 means that for this slope 2 metres in the horizontal direction must be covered for every 1 metre of vertical rise.

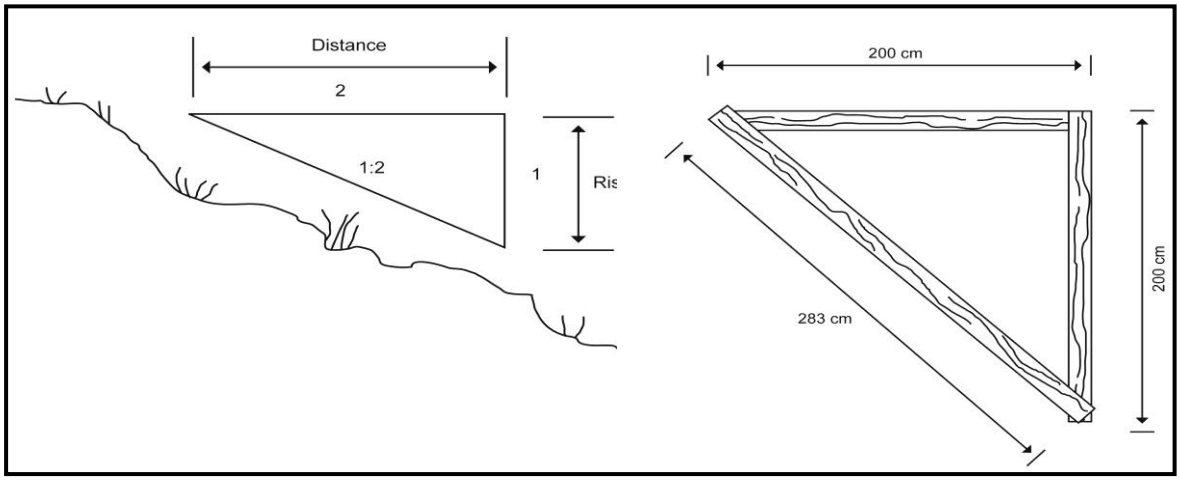

Figure 7 – Typical Triangle Set

The figure above shows a triangle set made from three wooden planks of 200, 200 and 283cm lengths respectively. This shows a slope of 1:1

SIMPLE, ROBUST, SETTING OUT METHODS WORK BEST FOR LABOUR-INTENSIVE CONSTRUCTION BUT ALMOST ANY SETTING OUT SYSTEM CAN BE USED, BEARING IN MIND THE ABOVE REQUIREMENTS

2.5.3 BASIC SETTING OUT

The system chosen for setting out must be based on people, as the units of production are people and not large machines. Therefore **positions and levels** should be given at **close intervals**, depending upon the accuracy needed by the specification. The setting out of line and level pegs is done in such a way that any team leader can transfer information from the pegs with the instruments he/she/she has been issued.

It has been found that layerworks can be controlled by level pegs or profiles at 10 mm intervals, placed on both sides of the road, when using string-lines. This, however, has not been sufficiently accurate for base course level control, where some 5 m spacing between levels gave improved results. Profile poles with stringlines and dipsticks have been found convenient, as the stringlines can be strung diagonally between poles as well as right angles across the road formation. This gave level control between the poles as well as at the cross-section at the poles.

Excavations and slopes are best set out by means of profiles together with boning rods or string lines.

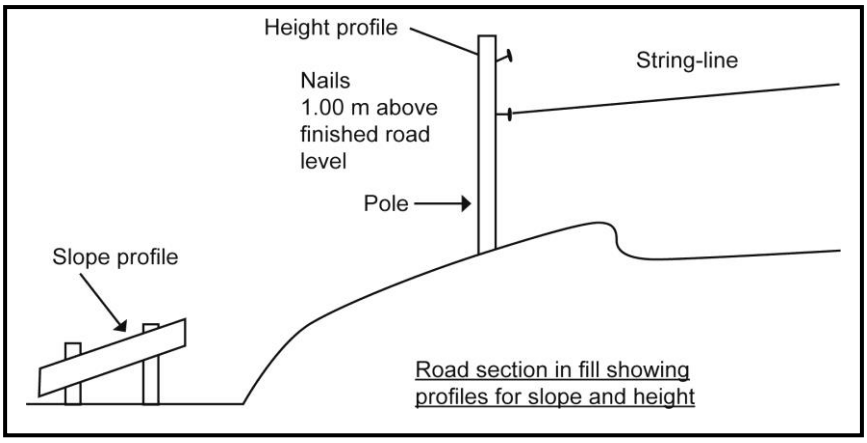

Figure 8 – Excavations and Slopes

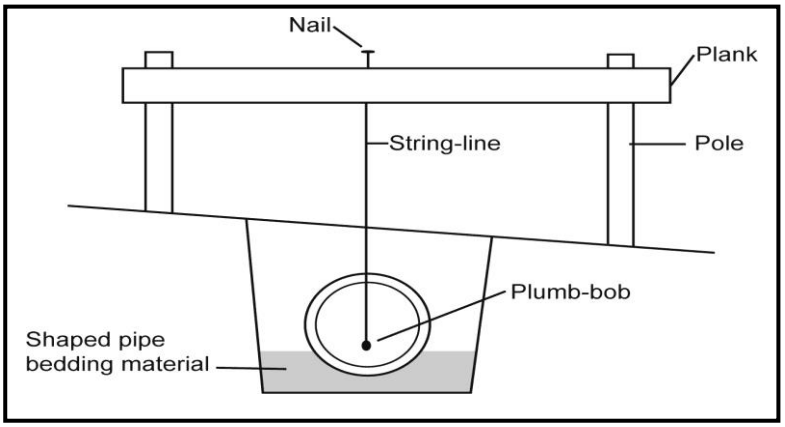

Figure 9 - Profile for trenching and pipe work

Portable templates, levelled by means of small spirit levels, give accurate information to teams excavating drains, as they show widths and slopes. See sketch below.

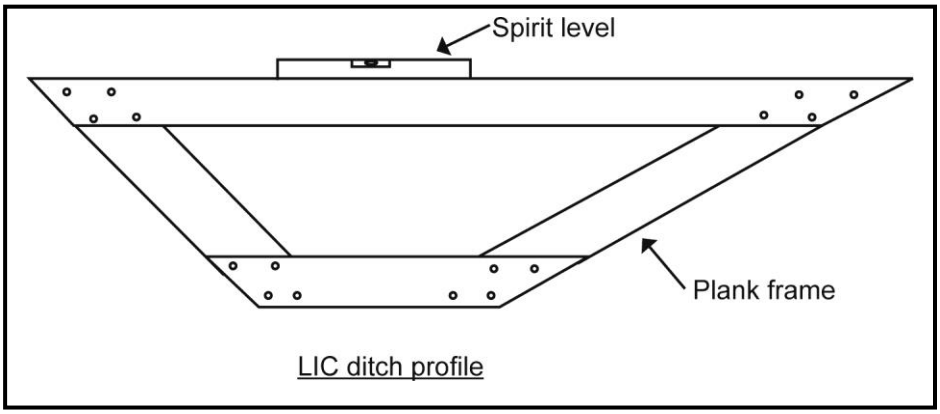

Figure 10 – Portable Template

2.5.4 HOW TO SET OUT A RIGHT ANGLE WITH A TAPE MEASURE

Naturally, the longer the sides of your triangle set, the smaller is the chance to make mistakes. A very good method is therefore to use a tape measure and pegs, measuring out a triangle with legs of 3, 4 and 5 metres. Lengths of 6, 8 and 10 or 9, 12 and 15 metres can also be used (in fact any three lengths of which the sum of the squares of the shorter two is equal to the square of the longer)

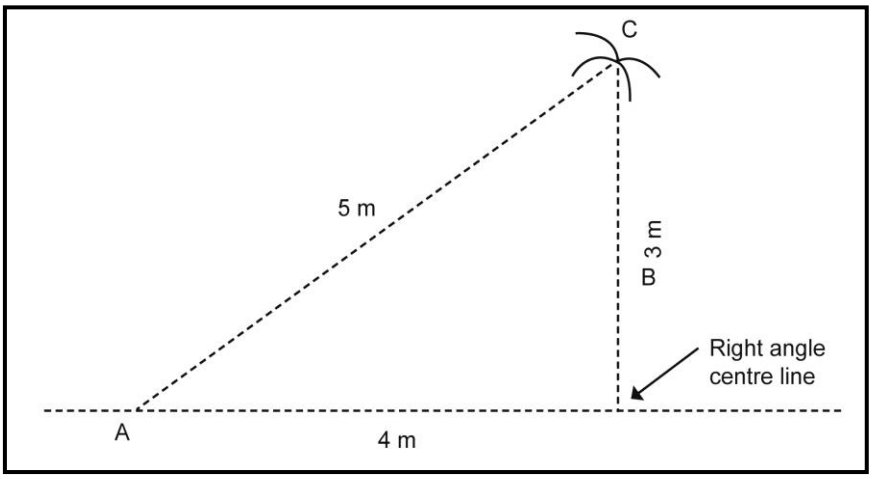

Figure 11 – Setting out with a Tape

2.6 SYSTEMS FOR THE MEASUREMENT AND RECORDING OF COMPLETED WORK TASKS ARE APPLIED ACCORDING TO LIC METHODS

Learning Activities Outcomes

This section of Assessment Criteria will enable you to:

Be able to set up and manage the measurement and recording of completed tasks according to LIC principles.

2.6.1 INTRODUCTION

The Site Supervisor should be the first person to arrive on site every morning and the last person to leave the site in the afternoon. There are several reasons for this:

- The Site Supervisor will be the person responsible for the work and therefore has to be present
- In order to make the maximum use of the time and effort of the workers, it is necessary that they actually begin work at the time appointed at the beginning of the working day. Generally this will only occur if the Site Supervisor is already on site:
  - ✓ An attendance record has to be kept
  - ✓ Tools have to be issued
  - ✓ Tasks have to be allocated
- The workers are more likely to apply themselves to their work if the Site Supervisor is on site than if he/she/she or she is absent
- During the bulk of the working day the Site Supervisor/s will spend most of their energies upon motivating, organising and controlling the group of workers for whose work they are responsible
- While the work is going smoothly they will be able to concentrate upon preparations for the following day's work. The list of preparatory activities must be checked and ready for the next day's work. During the course of the working day, while most of the workers are on site, the prime job of the Site Supervisors must be to see **that each worker is optimally employed.** This will only happen if the Site Supervisor is really on top of his/her/her work, that is, if preparations for the present day's work have been properly completed before the start of the working day.

1. Organisation of Labour

The potential benefits of LIC can only be achieved via innovative methods of organisation. The main components of this site organisation are:

- Optimum sequencing of construction operations
- Maximum use of "tasks" for each activity within an operation
- Balancing the workforce
- Payment related to production
- Suitable conditions of employment

- Trained Site Foremen and Site Supervisors to ensure motivation, correct work procedures, control, availability of tools and equipment

The effective organisation of a site depends on the Site Supervision staff being able to do many things during the course of a day. This includes paying attention to many details. One of these details is the keeping of daily records. Records must be kept of the following:

1. **Name and number of individual labour being employed**
   - The labour register is a record of each individual employed
   - The total number of people employed must be recorded in the muster roll that is the record of daily attendance. Additional detail as required may be recorded in the production records.
2. **Stores: issue and receipt of tools**
   - Stores records must be kept to indicate when new tools and materials are required
   - The daily tools issue sheet i.e. the record of the tools issued to and returned by each worker every day provides a good cross-check for the muster roll.
3. **Production**
   - Daily records must be kept of essential production operations.

2. Site Control

Records are to be kept in order to be able to check whether the amount produced compares well with “normal” production rates. The Site Supervision staff would be expected to know what “normal” rates should be and should be able to judge whether the production rate on the particular site is adequate. This forms part of site control.

3. Control System

Records need to be kept because some of this information will be required at programme level. This information is provided by the Direct Site Supervision staff through regular reporting – part of the control system. Staff should not be burdened with the recording of unnecessary detail. The collection of unnecessary data takes up time and distracts from the major task of constructing a technically sound product. Records provide the information on which reports are based. A report provides selected information to the next Supervisory level.

At the site level the following records should be kept:

- **Labour** **:** Registration of labour; Daily recording of labour; The muster roll
- **Material** **:** Daily material received and issued for use
- **Tools** **:** Daily tools issue and receipt
- **Production** **:** Weekly operation record

4. Project and Programme Control

Work is controlled in order:

- To see if the targets can be reached
- To improve the basis for better planning and understanding of the work.

If the control system shows that the targets are not being reached, then the reason(s) must be found and performance improved if possible. Control has to be asserted on a continuous basis.

Work is controlled at all levels in a programme:

- Site level
- Project level
- Programme level

Different types of control exist:

- Quality control
- Production control
- Cost control

Production control is exerted by controlling two things:

- The inputs (e.g. the number of workers and material used)
- The outputs (e.g. the length of camber formation constructed).

The control is carried out by means of inspection, records and reports.

5. Site Inspection

The Supervisor staff must inspect the work regularly. These inspections have to be carried out thoroughly. The staff must be able to communicate with the workers so that they know what is required and how to achieve it.

The quality of work must be according to the specifications set by the construction programme. Some inspections, particularly those at the end of the working day, provide records of the work performed during the working day.

When inspecting the work, the following should be checked:

- Has the correct quantity of work been finished?
- Is the quality of the work up to the standards of the programme?
- Have the correct number of workers been engaged on the work?
- If the answer to any of these questions is “NO” then ask the question – “What are the reasons for the negative response?”

6. Daily Controls

- The supervisors perform the important daily control functions of instruction, direction and monitoring progress.
- The appointment of a Wage Clerk who visits the site several times each day allows for daily comprehensive records of attendance and production of each labourer. This information is recorded.
- At the end of each period the record of production for each labourer is consolidated for the purpose of determining remuneration. These records should be agreed to by the Contractor and are used by the project management team to make up the wage packet. They can also be used to create a payment certificate.

7. Testing

The testing of completed work is a considerable problem which can be overcome by establishing test teams which move from contract to contract testing the service for which they are responsible e.g. water, sewer, compaction.

8. Approval/Rejection

1. If the work can be approved, the group may be released for the day. The input for each activity, i.e. the number of workers, must be recorded in the Operation Record.
2. If the work cannot be approved, the supervision staff must find out why it has not been completed or why it is below standard.
3. If the task has not been completed to the proper standard, the supervisory staff must first check that the task was set out correctly.

The following reasons account for the majority of cases where the correct amount of work has not been completed to the proper standard:

- The task rate was too high
- The tasks was not properly set out
- The calculation of the work to be carried out contained an arithmetical error which gave a lower volume than the actual one
- The work struck unforeseen difficulties such as roots, boulders or rock
- There were a few hours of rain

In such cases where the workers were not at fault, their tasks should be completed the following day by workers who are working on a daily paid basis. If the workers are to blame for non-completion, then they must complete the work before being authorised to leave the site even if that means working beyond the formal end of the working day.

If the quality of the work is below standard, it may indicate that the supervisory staff must provide better instructions. The best instructions are those that are followed by a practical demonstration. The supervisory staff must make a point of doing this whenever they are instructing the workers, i.e. the staff must be able to do all the work expected of a worker. It is very important not to accept sub-standard work.

Several inspections of the work, especially early in the day, will help avoid rejection of work at the end of the working day.

METICULOUS RECORDS ARE NEEDED FOR PROPER TASK PAYMENT OF THE LABOUR

2.6.2 MEASUREMENT AND RECORDING OF TASKS

LIC contracts are supervisory intensive. The contractor needs to manage a large labour force, probably between 150 and 300 strong. To do this successfully, the contractor will require a strong management team, a clear hierarchy and efficient systems of recording completed tasks. Control of productivity is partly taken care of by the use of task work methods, but still needs good and detailed planning.

It is advisable to maintain accurate records of production so that productivity can be calculated for every activity. This helps planning and can form the basis of more accurate tendering in the future. Records also form a basis for assessment and a means of feedback for the community. "Ownership" of the project by the community leads to a sense of pride in it and an enhancement of the overall finished product. Meticulous records are needed for proper task payment of the labour. Regular and accurate payment of wages is essential and wages must also be paid on time.

The following is a useful summary of the types of records that should be kept. Some of the records are kept manually and others are best maintained on a computerised database:

- The contract
- Attendance and production of individual labourers
- Payments due and made to individual labourers or Contractors
- Engineering progress by contract and for the whole project for operations and activities
- Materials (received, issued and reconciliation)
- Financial records of payments made and refunds received
- Credit arrangements with suppliers and normal invoice/delivery note/statement cycle associated with materials purchased and supplied
- Statistics related to cost per task, unit, function or any other aspect that may be of interest or of necessity to assess the project and to motivate extensions to the contract or the creation of other similar contracts

Table 3 – Task Recording Form (Groups or Individuals)

Name	Description of Work	Task Rate	Dimensions of Completed Work	Length/ Area/ Volume	Quality Check

ATTENDANCE REGISTER									From ……. To……		
SITE									Supervisor		
Team Leader											
Worker name	Work	M	T	W	T	F	S	S	Days worked	Pay amount	Remarks
Totals											

PRODUCTION RECORD	
CLIENT PROJECT	CONTRACTOR CONTRACT NUMBER

DATE	Location		Description	Measurements				Rate	Amount
	From	To		Length	Width	Depth	Volume		
			Totals						

OUTCOME

3

3 OUTCOME 3: APPLY RESOURCE MANAGEMENT TECHNIQUES FOR LABOUR INTENSIVE CONSTRUCTION PROJECTS

The purpose of this Outcome is to enable you to apply resource management techniques for Labour Intensive Construction projects

This Outcome will enable you to:

1. *Estimate labour requirements for LIC activities accurately*
2. *Apply labour selection, recruitment and induction procedures to projects according to LIC principles*
3. *Agree individual and group tasks according to LIC procedures*
4. *Apply appropriate plant, equipment and tools according to LIC principles and activity requirements*
5. *Identify and procure material resources timeously according to the requirements of the programme*

3.1 LABOUR REQUIREMENTS FOR LIC ACTIVITIES ARE ESTIMATED ACCURATELY

3.1.1 ESTIMATE LABOUR REQUIREMENTS

Learning Activity Outcomes
This section of Assessment Criteria will enable you to:
Estimate labour requirements for LIC activities

PREVIOUSLY, WE LOOKED AT TASK SIZES AND AGREEMENT BY THE COMMUNITY. THESE AGREED TASKS MUST BE USED FOR ESTIMATING LABOUR REQUIREMENTS

1. Calculation of Labour Requirements

When supervisors and team leaders have been properly trained, they can implement and administer task work without much help from management staff. However, a basic set of standard tasks is essential as a starting point. The tables of standard tasks given in **Table 2 – Standard Tasks** may provide the necessary basis, but the contractor must use his/her own experience to factor those tasks to suit local conditions and norms. A previous chapter covered the choosing of tasks sizes and agreement by the community. These agreed tasks must be used for estimating labour requirements.

Task work needs to be **balanced**, that is, groups of workers need to work at similar speeds so that **no portion of the work lags behind or gets ahead of another portion by too much**. This is particularly important when one group of workers produces something for other groups to use. For example, borrow excavation must keep ahead of loading and transportation of the borrow materials, and these in turn, must keep ahead of spreading and compaction operations.

The amount of work in each activity must be accurately measured or calculated in metres, square metres or cubic metres. This may be obtained from the Bill of Quantities or the Bill may first need to be broken down into activities using a “Work Breakdown Structure” (WBS). The appropriate task rate is chosen from the table and the number of man-days necessary to complete the activity is calculated. The time needed for the activity can be calculated if the team size is known, or the team size can be calculated if the time available for the activity is known. Team sizes are adjusted until the activities are completed in similar time intervals. The calculations also help in assessing the resource needed, like tools, transport units, etc.

When calculating the tasks, the following definitions and formulae can be used:

Definitions: **1 task** = amount of work for 1 person for 1 day

1 man-day = 1 person who is busy for 1 day

Man-days = number of workers x number of days

Equation 1: $\frac{Quantity}{Task}$ = M (The number of days one (1) person will take to do the task)

Equation 2: $\frac{Man-days}{Days}$ = P (The number of people required to do the task in the allowed time)

Equation 3: $\frac{Man-days}{People}$ = D (The number of days in which a team will do a specific task)

To summarise, the steps needed in the calculations are:

- Calculate the quantity to be constructed
- Choose the appropriate task rate, noting that the units of quantity and task must be the same (metre or square metre or cubic metre)
- Calculate the number of man-days needed to complete the quantity of work (using Equation 1)
- Calculate the no. of people needed (using Equation 2) if the time in days for the job is known, **OR**
- Calculate the number of days needed if the team size is known (using Equation 3).
- Balance the operation by adjusting the number of people doing each activity.
- Labour costs can be obtained by multiplying the no. of people chosen by the current wage rate.

2. Comment

- This process will give a good estimate of actual labour cost.
- A first approximation for the additional cost of “hands-on” site supervisors (or team leaders), who are paid at a higher rate, may also be obtained. As the team leaders take part in the work, their number is already included in the number of workers. All that is required is to add in the additional portion of the wage. Divide the estimate of the total number of man-days needed for the work by 10 to get the number of team leaders and multiply this number by the difference in the wage. **(Note: there must be one (1) team leader for every ten (10) workers)**

If man-days = M

Number of team leaders needed = man-days divided by 10 = M/10

Labour wage rate = W

Team leader wage rate = SW

Then the additional cost of direct site supervision = **(M/10) x (SW-W)**.

Example 3.1.1

Excavate sticky soil with a team of seven new workers over an area of 7 m long, 4 m wide and 1 m deep. How long will the job take?

Answer 3.1.1

Quantity of work = 7m x 4m x 1m = 28 m^3

The task rate chosen is 2 m^3/md. This is the lower value given in the table because the workers are new to the job and are unlikely to be able to undertake the maximum task size until they have become accustomed to the work.

(Equation 1): Number of man-days required $= \frac{quantity}{task} = \frac{28}{2}$ = 14 man-days

(Equation 3): Number of days needed $= \frac{man-days}{numberofpeople} = \frac{14}{7}$ = 2 days

Example 3.1.2

A team has the job of excavating in firm soil at a task rate of 4.5 m^3/md and transporting the soil by wheelbarrow over a haul distance of 80 m (table gives task of 2.0 m3/md). How many people are needed for a balanced team, in order for both tasks to be finished at the same time?

Answer 3.1.2

For this problem take the quantity to be the highest task size, in this case = 4.5 m^3 and calculate the man-days using Equation 1 for each activity separately.

Excavate: $\frac{quantity}{task} = \frac{4.5}{4.5}$ = 1 man-day

Transport: $\frac{quantity}{task} = \frac{4.5}{2}$ = 2.25 man-days

(Note: you cannot have fractions of people so we need to round off this figure)

We can do this by multiplying 2.25 by 4 we get : 2.25 x 4 = 9 man-days

However we must then 1 by 4 to keep the sum balanced : 1 x 4 = 4 man-days

If we add these two together we will get a total of : 13 man-days

Use Equation 2 to get the can get the people required:

$\frac{Man-days}{Days} = \frac{13}{1}$ = 13 people (Therefore 13 people are a balanced team for excavating and transporting the soil.)

An alternative way of doing this is to calculate the Lowest Common Multiplier (LCM)

How to Calculate the LCM by the Factorisation Method

LCM of two or more numbers is the least number that is exactly divisible by each one of the given numbers.

Each of the numbers in the equation must be expressed as a product of prime factors.

The product of highest powers of all prime factors gives LCM.

Example:

Calculate the LCM for the following numbers 36, 90, 72.

Step1: - Express the numbers as product of prime factors.

$36 = 2^2 \times 3^2$ [(2 x 2 = 4) x (3 x 3 = 9)] [4 x 9 = 36]

$90 = 2^1 \times 5^1 \times 3^2$ [(2 x 5 = 10) x (3 x 3 = 9)] [10 x 9 = 90]

$72 = 2^3 \times 3^2$ [(2 x 2 x 2 = 8) x (3 x 3 = 9)] [8 x 9 = 72]

Step2: Take the prime numbers with highest power of ALL the prime numbers.

In this case the identified prime numbers are 2, 3 and 5.

The highest power of 2 in the set is - 2^3

The highest power of 3 in the set is - 3^2

The highest power of 5 in the set is - 5^1

Step3: Calculate the Product of the numbers identified.

$2^3 \times 3^2 \times 5^1 = 8 \times 9 \times 5 = 360$

Therefore the LCM of 36, 90 and 72 is 360

Check: 360 ÷ 36 = 10

360 ÷ 90 = 4

360 ÷ 72 = 5

Table 4 – How to Calculate the LCM

Using the method set out in **Table 4 – How to Calculate the LCM** we calculated that the lowest common multiple (LCM) of the task rates to be 18.

Put quantity = 18 m^3 per day and calculate the man-days using Equation 1 for each activity separately.

Excavate: $\frac{quantity}{task} = \frac{18}{4.5}$ = 4 man-days

Transport: $\frac{quantity}{task} = \frac{18}{2}$ = 9 man-days

The total man-days for the operation therefore is 4 + 9 = 13 man-days

Use Equation 2 to find the number of people needed for the operation to be completed in 1 day:

$\frac{Man-days}{time} = \frac{13}{1}$ = 13 people (Therefore 13 people are a balanced team for excavating and transporting the soil.)

Check

4 people excavating at 4.5 m^3/md will produce 4 X 4.5 = 18 m^3 in 1 day

9 people transporting soil at 2 m^3/md will produce 9 X 2 = 18 m^3 in 1 day

The quantity from each activity is the same, hence the operation is balanced.

Example 3.1.3

How many workers are needed for the following operation?

12 m^3 of soil for pipe bedding is to be excavated from firm soil in a borrow pit beside the trench. The soil is loaded into wheelbarrows and transported for 60 m through a dip 1m deep and up to the trench. The soil is tipped into the trench and spread to the thickness required for the bedding. The bulking factor of the soil is 1/3.

Answer 3.1.3

Task rates and volume calculations are:

Excavate firm soil : 3 m^3 (bank)/md - This is equal to [3 + (1/3 x 3 =1)] or (3 x $1^1/_3$) = 4 m^3 loose soil

Transport : equivalent haul distance is 60 + 20(1 meter down + 1 meter up) = 80 m, and the task rate is 2 m^3 (loose)/md

Spreading soil : task rate is 12 m^3 (loose)/md

Using the task rates in **loose** volume, calculate the lowest common multiple and use this figure as the quantity for all the calculations of man days:

The LARGEST TASK RATE is the Task Rate for Spreading loose soil and is = 12 m^3 /md

We will therefore use this as our QUANTITY in Equation 1

Man-days of work = $\frac{quantity}{task}$ (from Equation 1)

Excavate: $\frac{12}{4}$ = 3 man days

Transport: $\frac{12}{2}$ = 6 man days

Spread: $\frac{12}{12}$ = 1 man day

Total man days = 10 man days

Therefore a team of 10 workers can undertake this work in 1 day. This is the size of a balanced team, where all the work is done at the same speed. Should more output be required, the team should be doubled or trebled.

3. Team tasking

For the rapid calculation of team tasks, the recommended approach is to convert the task rates from a quantity per man-day to man-days per quantity unit. The following example illustrates the method.

Example 3.1.4

How should a group task be organised for a team of 5 workers that will work on a pipeline excavation, clearing and grubbing light vegetation, removing 100 mm of topsoil and then excavating 0.50 m deep in stony gravel.

Answer 3.1.4

The task rates for the work are as follows:

Clearing and grubbing light vegetation:	150 m^2/md
Remove 100 mm soft topsoil:	5 m^3/md
Excavate stony gravel to heap beside trench:	2 m^3/md

Note that the problem is given in mixed units: area and volume. These must be converted to one unit in order to solve the problem.

The trick is to calculate what needs to be done per square metre or per cubic metre. We will use the area conversion in the example. (As an exercise, do this problem again using volumes).

If the task quantities are converted to area, using given geometry, then the rates become:

Clearing and grubbing light vegetation : = 150 m^2/md

Remove 100 mm soft topsoil : $\frac{5}{0.100}$ = 50 m^2/md

Excavate stony gravel 0.5 m thick : $\frac{2}{0.50}$ = 4 m^2/md

These rates should then be turned upside down to give the reciprocal:

Clearing and grubbing light vegetation : $\frac{1}{150}$ md/m^2 = 0.006666666666 md/m^2

Remove 100 mm soft topsoil : $\frac{1}{50}$ md/m^2 = 0.020 md/m^2

Excavate stony grave 0.5 m thick : $\frac{1}{4}$ md/m^2 = 0.250 md/m^2

By adding together the task rates, the number of man days per square metre is obtained:

0.007 md/m^2 + 0.020 md/m^2 + 0.250 md/m^2 = 0.277 md/m^2 (accurate to 3 decimal places).

As the team size is given as 5 workers and the time for the work is one day, the total man days available for the work is 5 (5 worker x 1 day = 5 man days)

As each square metre needs 0.277 man days to complete, the area that can be tackled is:

$\frac{5}{0.277}$ = 18.051 m^2

Now let's check our calculation using Equation 1:

18 m^2 of "clearing and grubbing" remains : 18 m^2

18 m^2 of "remove 100 mm topsoil" becomes : 18 x 0.1 = 1.8 m^3 of topsoil;

18 m^2 of "excavate 0.5 m stony gravel" becomes : 18 x 0.5 = 9.0 m^3 of gravel.

Clear and grub : 18 m^2 / 150 m^2/md gives = 0.120 man days

Remove topsoil : 18 x 0.1 = 1.8 m^3 / 5 m^3/md gives = 0.360 man days

Excavate gravel : 18 x 0.5 = 9.0 m^3 / 2 m^3/md gives = <u>4.500</u> man days

Total man days: = 4.980 man days

This is very nearly 5 man days so it is sufficient work for 5 people for 1 day and is a balanced group task. (Note that rounding down of the area and calculating only to 3 decimals has given the small discrepancy in the calculations)

For calculating labour requirements for a project, a Team Balancing Schedule has been developed. See **Table 5 – Format of Team Balancing Schedule** below.

Note that this Schedule may be used at various stages of the contract cycle:

- During the design and specification phase, use can be made of the Team Balancing Schedule to identify the exact scope for individual tasks and helps with the drawing up the tender documentation.
- Tenderers can use a Team Balancing Schedule to help calculate their tender.
- Contractors can use the Schedule to check and test estimates made at that time of tender.

CONTRACTOR									
PROJECT									
OPERATION or ACTIVITY		**QUANTITY Q**	**TASK RATE 1**	**Man-days M**	**No of WORKERS P**	**Days D**	**BALANCE DAYS * D/balanced**	**Actual No WORKERS Factual**	**Subtotal of WORKERS for group**
		Obtain from BoQ or WBS	From task table	M = Q/t	Estimate or guess P	D = M/P	Days required to balance output of linked teams	Pa = M/Db	P group
1									
2									
3									
4									
5									
6									
7									
8									
9									
10									
TOTAL MAN-DAYS					**TOTAL WORKERS REQUIRED**				
Labour costs = Total man-days x wage rate = ∑M x W									R
e/o Labour costs for direct site supervision = (∑M / 10) x (SW – W)									R
Total direct labour costs									**R**
*Balance Days must be the same for functionally linked operations									

Table 5 – Format of Team Balancing Schedule

How to use the form:

1. Enter the details of the contractor, project and list all the operations and the activities which are required. These may be the items in the Bill of Quantities or activities which result from an assessment of the actual Work Breakdown Structure which need to be taken into account in order to generate the items in the Bill of Quantities i.e. the full list of activities does not necessarily correspond directly to the items in the Bill, because there may be more activities to be analysed than are conventionally measured in a Bill of Quantities.
2. In the third column enter the quantities (Q) of each operations and activity.
3. In the fourth column enter the task size (t) i.e. the amount of work which has either been allocated to this type of task, or the amount of work which the tenderer feels can be completed in a single task.
4. For each operation calculate the number of tasks (man-days M) which need to be completed by dividing the Quantity by the Task size (Q/t).
5. Estimate the number of workers (P) that could be applied to each activity and operation, bearing in mind other concurrent activities and operations and the overall size of the team. At this stage, the estimate will still be preliminary but will indicate the likely number of days required to complete the project.
6. In the next column enter the number of days (D) required for each activity or operation, by dividing the man-days (M) by the number of workers estimated (P). This will give an indication of the amount of time required for the activity or operation by comparison with other functionally linked activities that comprise an operation.
7. Determine the number of functionally linked balance days i.e. the number of days which could reasonably be allocated to the activities which are functionally linked. The number of balance days (Db) required for the linked operations within an operation is entered against all the activities in the operation.
8. Determine the actual number of workers (Pa) required to achieve completion of the activities and operations on a task basis within the period selected, by dividing the man-days (M) by the balance days (Db). The number of workers should be rounded to the nearest whole number.
9. Calculate the total number of tasks (or man-days) required to complete the project (all operations).
10. Calculate the labour costs by multiplying the number of man-days for the project by the wage rate. Add in the team leader costs 9 as above) and obtain the total direct labour cost.
11. Total up the number of workers required for each operation and determine the total number of workers required at any one time.

Notes:

1. Decide if the various functionally linked groups of activities are to be completed simultaneously or sequentially. If they are to be completed simultaneously, then the grand total of the sub totals for each operation will indicate the size of the team which is required to carry out the contract. If work can be carried out sequentially, then a careful inspection must be made, in an attempt to maintain the size of the workforce and still maintain a balance amongst the different operations. If it is possible to hire workers on a daily basis, then the optimum team size, as determined in accordance with the Team Balancing Schedule for each operation, will determine the work force required on each day.
2. If multiple tasks (in other words more than one task per worker per day or per team per day), is allowed, then some adjustments to the probable number of days will be required.
3. If the same workers are to complete all activities in an operation, for example excavate, lay pipes and backfill, then the total number of workers required will be determined by the combined productivity for all activities. This approach may best be achieved by the definition of team task and use thereof to determine the number of days.

Example 3.1.5 – (Team Balancing)

A Bill of Quantities has been prepared for a simple project. **See Table 6 – Orange Farm School Sports Fields: Bill of Quantities**

The works consists of the construction of a basic sports field at a Department of Education School. With the exception of a roller for compaction, no other mechanical equipment may be used for excavation or for transport. The maximum assumed haul distance is 100 metres.

The following standard tasks sizes have been assumed and prescribed for certain activities. **See Table 7 – Team Balancing Schedule – Example 3.1.5**

Excavate:	3.00 m^3
Load:	6.00 m^3
Haul:	2.70 m^3
Extra over hard:	1.50 m^3
Spread to line and level:	12.00 m^3
Compact	1,000m^2
Fertilise	5,000m^2
Plant	7,500m^2
Water	1,300m^2

ITEM NO	PAYMENT	DESCRIPTION	UNIT	QTY
1.		EXCAVATION		
1.1		Excavate, load and haul, place in loose piles either in fill area or stockpile. (All material ex adjacent school platform)	m^3	13000
1.2		Extra over 1.1 for hard pickable material	m^3	4000
1.3		Spread to line and level	m^3	11000
1.4		Compaction to 93% Mod AASHTO using a Bomag 90 or equivalent	m^3	11000
2.		PREPARATION		
2.1		Topsoil: place, ex stockpile, selected soil 150 mm thick, or as directed, no compaction.	m^3	1950
3.		FERTILISER: Supply, store and maintain	t	1.25
3.1		Superphosphate		
3.2		LAN (Limestone Ammonia Nitrate)	t	2.00
4.		APPLICATION OF FERTILIZER		
4.1		Add and mix into topsoil layer superphosphate at rate of 100gm/m^2	m^2	13000
4.2		Apply to newly planted surface LAN (Lime Ammonia Nitrate) at a rate of 50gm/m^2	m^2	13000
4.3		Apply to growing grass LAN (Limestone Ammonia Nitrate) at a rate of 50gm/m^2	m^2	26000
5.		GRASSING		
5.1		Supply, store and maintain approved fresh cynodon dactylon seed	kg	19.00
5.2		Apply seed to prepared areas at rate of 15kg/ha	ha	1.30
5.3		Rake into surface and roll with light roller/Sandpro tyres	ha	1.30
6.		WATERING		
6.1		Prior to seeding. Water entire surface to be seeded to obtain moist conditions to not less than 150mm deep. (excluding cost of water i.e. labour only)	ha	1.30
6.2		Water and maintain newly planted areas immediately after planting and as often as directed by the Engineer until grass is established. ("Established" will be regarded as general cover with bare "spots" of no more than 10% and no "spot" larger than 250 mm in diameter. Should cover not be adequate, in the opinion of the Engineer, re-seeding, at the Contractors expense, must be undertaken).	ha	1.30
7.		MOWING		
7.1		Mowing new established grass, when directed by the Engineer, using acceptable motorised mowers including disposal of cuttings off site. (3 visits)	ha	4.00

Table 6 – Orange Farm School Sports Fields: Bill of Quantities

PROJECT: Orange Farm School Sports Fields										
OPERATION		CONSTRUCTION ACTIVITY	QUANTITY	TASK	No of tasks	No of workers	Days	Balance days *	Actual no workers	Sub total workers for group
			Q	t	M = Q/t	P(estimate)	D = M/P	Db (actual)	Pa = M/Db	
1	1 SETTING OUT		LUMP SUM		6	3	2	2	3	3
2	2 ELHUS and COMPACT	2.1 EXCAVATION	13 000	3	4 333	80	54	60	72	
3		2.2 EXCAVATION E/O HARD	4 000	1.5	2 667	10	267	60	44	
4		2.3 LOAD	13 000	6	2 167	40	54	60	36	
5		2.4 HAUL	13 000	2.7	4 815	40	120	60	80	
6		2.5 SPREAD	13 000	12	1 083	20	54	60	18	
7		2.6 COMPACT	11 000	1 000	11	2	6	60	1	251
8	3 TOP SOIL	3.1 LOAD	2 000	6	333	10	33	30	11	
9		3.2 HAUL	2 000	2.7	740	10	74	30	25	
10		3.3 SPREAD	2 000	12	167	5	33	30	6	42
11	4 GRASSING	4.1 FERTILISE	26 000	5000	5	2	3	3	2	
12		4.2 PLANT	13 000	7500	2	2	1	1	2	
13		4.3 WATER	13 000	1300	10	3	3	3	3	7
14	5 MAINTAIN	5.1 WATER	120 000	15 000	8	1	8	3	3	
15		5.2 MOWING	120 000	15 000	8	1	8	3	3	6
TOTALS			Total man-days = 16361				Workers required: 309			309
*Balance Days must be the same for functionally linked operations										
JAC/EIEC										

Table 7 – Team Balancing Schedule – Example 3.1.5

4. Programme

The work of calculating the labour requirements must be combined with the programming of the job. This enables the site manager and supervisors to decide how many people to use and to calculate how long each activity will take, or decide how much time can be spent on each activity and then to calculate the number of people needed. Note that it is bad practice to change the workforce continually. Workers should be recruited for a certain period of time and should be kept constant over several months. It is sometimes possible to hire additional workers on a temporary basis and to discharge them when their work is done.

The labour requirements should be calculated and plotted on a labour histogram just below the bar chart. The labour histogram will clearly show how the labour requirement varies over time. The peaks and troughs in the histogram need to be smoothed by slightly changing the programme to decrease or increase the labour force enough to even out the line. Obviously this needs quite a lot of calculation and changing and re-calculation to get it right.

The overall planned completion date should be established from the **construction programme**, based on a realistic sequence of linked activities. The construction programme is a powerful management tool.

Because the environment influences the project, planning has to be updated regularly. Weather, suppliers and other factors can delay the project and therefore the planning has to be adjusted continuously. We call this dynamic planning.

This programme forms the basis of all the other programmes that we need to produce to manage different aspects of the project.

In order to plot a detailed bar char (sometimes referred to as a Gantt Chart):

1. Write down a list of the key operations and activities under each operation.
2. Calculate the quantity of work involved in each activity (or operation).
3. Assume a team size, choose production rates for each operation and calculate the construction time for each activity.
4. Draw up a simple network showing the sequence of events in order to establish the logical order in which they should take place.
5. For each activity, draw a bar corresponding to the calculated construction time on a programme sheet.
6. Write down the necessary number of labourers on each bar and add up the total number of labourers per period of time (for example, per week). Below the bar chart draw up a histogram of labour required versus time.
7. Now inspect the bar chart and ask yourself the following questions:
    a) Does the planning meet the overall time required?
    b) Do the bars follow one another in logical fashion?
    c) Is the labour graph sensible or are there high peaks and broad valleys
8. Adjust the time or sequence of activities and ask yourself the questions under point 7 again until you are satisfied with the result.

TIME IN WEEKS	1	2	3	4	5	6	7	8	9	10	11	12	13	14	15	16	17	18	19	20	21	22
SETTING OUT																						
ELHUS & COMPACT																						
SPREAD TOP SOIL																						
GRASSING																						

Table 8 – Orange Farm School Sports Fields (High Level Programme)

TIME IN WEEKS	1	2	3	4	5	6	7	8	9	10	11	12	13	14	15	16	17	18	19	20	21	22
SETTING OUT	3																					
ELHUS																						
EXCAVATE		116	116	116	116	116	116	116	116	116	116	116	116									
LOAD			36	36	36	36	36	36	36	36	36	36	36	36								
HAUL				80	80	80	80	80	80	80	80	80	80	80	80							
SPREAD					18	18	18	18	18	18	18	18	18	18	18	18						
COMPACT					1	1	1	1	1	1	1	1	1	1	1	1						
TOP SOIL																						
LOAD													11	11	11	11	11	11				
HAUL													25	25	25	25	25	25				
SPREAD													6	6	6	6	6	6				
GRASSING																						
FERTILISE																			2			
PLANT																				2		
WATER																				3		
MAINTENANCE (ON																						
MOW																					3	
WATER																						3
TOTAL LABOUR	3	116	152	232	251	251	251	251	251	251	251	251	293	177	141	61	42	42	4	3	3	3

Table 9 – Orange Farm Sports Fields (Detail Programme)

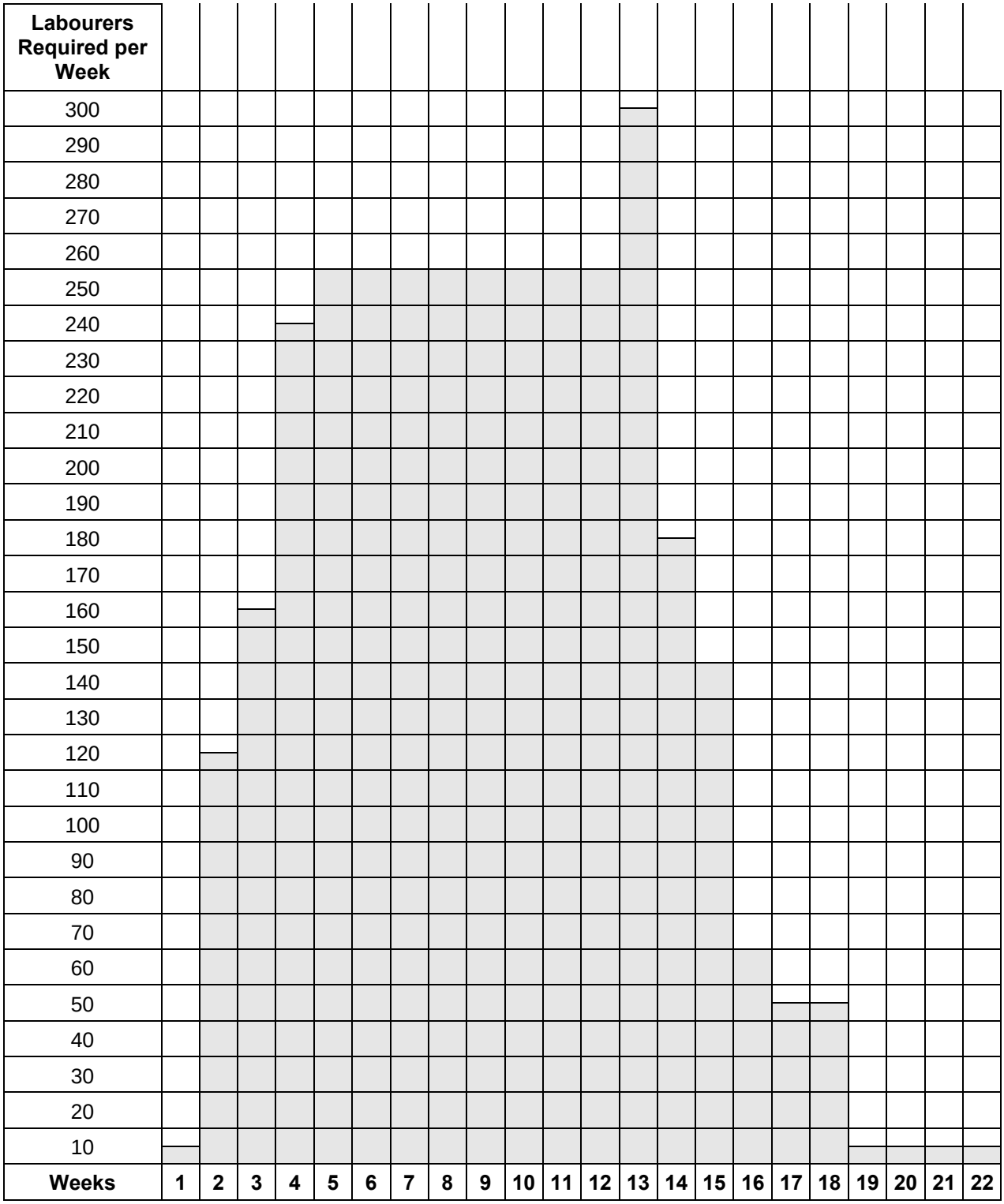

Table 10 – Labour Histogram for Orange Farm School Sports Fields

Referring to the labour histogram above note that the labour requirement is not constant and this may require some action on the part of the Site Agent. For example, spare workers can be switched to another work area or a few workers can be “borrowed” from another job to assist when extra hands are needed.

5. Operational Estimating

This is also known as Jobbing or Job costing. It is the process of considering all the operations that go into executing the activity or task. Costs are then allocated to each operation in terms of labour, material, plant, equipment and transport as shown in **Table 11 - Operational Estimating Format** below (all costs in Rand)

Activity	Description	Labour	Material	Plant & Equipment	Transport	Total
100	Mark out	500	100			600
200	Dig foundation	2 000	100	600		2 700
300	Lay foundation	4 000	15 000	12 000	3 000	34 000

Table 11 - Operational Estimating Format

Once the activity has started, operational estimating enables the progress to be quantified as follows:

- It provides a cost estimate for all the WBS (Work Breakdown Structure) work packages and activities.
- The activity's progress can be planned and tracked by determining a valuation of work in progress (percentage complete or remaining duration). This technique links in well with the data capture and project control.

When the activity is complete, the profit and loss situation can be established. This data can also be used to ensure that the estimating data base is kept up-to-date.

6. Parameter Costs

These are also called unit rates. Although a project tends to be a unique undertaking, much of the work may be repetitive. Parameter costs are developed from unit rates for common items of work based on previous projects. This technique estimates a project's cost from a book of unit rates. For example, consider the following parameters:

Per linear metre:	House piping and wiring; Welding
Per square metre:	Decorating and painting; Flooring; House building
Per cubic metre:	Concrete; Water supply
Per page:	Reports and manuals; Photocopying; Printing a book
Per ton:	Steel reinforcing
Per HP or KW:	Engine and generator power; Electrical supply
Per Km:	Car hire; Transport; Roadworks
Per hour:	Labour; Machine time

Parameter costs are used in conjunction with operational estimating to provide the activity costs.

- Unit rates work well in a controlled work environment, e.g. contracting. Many projects, by virtue of their location and scope of work, may involve other considerations:
- Unit rate estimating is appropriate for a contractor with a record of small jobs within a limited geographical area.
- As the contracts increase in size, so the data base samples will tend to decrease in number.
- Costs are influenced by remote locations, logistics, travelling distances and the condition of the roads.
- Governmental laws and regulations.
- Environmental pressure groups.
- Weather conditions can be statistically predicted but what happens in practice may be very different.
- Are there utilities available? - Water supply, power supply, accommodation, public transport, etc.

Parameter costing is probably the most commonly used estimating technique and will form the basis of most estimates.

7. Quality and Accuracy of the Estimate

The quality of the COST ESTIMATE depends on your use of the best approximation of the following:

- The time available
- The information available
- The techniques employed
- The expertise and experience of the estimating personnel

The accuracy of the COST ESTIMATE depends on the level of detail it is based on. This information comes from the following:

- The scope of work
- The contract
- The specification
- The extent of risk and uncertainty in the project

The quality of the estimate can be improved as the project is executed when more detailed and accurate information becomes available.

Unfortunately, the Project Manager usually has to commit his/her company financially and contractually at the tender/quotation stage when the amount of data and information may be limited. For this reason alone it is important to be able to provide accurate estimates based on incomplete information at the tender stage.

Although estimating usually focuses on the financial aspects of the project, it is important to remember that the costs cannot be accurately established until the other factors such as time, resources, materials and equipment have been quantified.

Estimating is an integral part of the project management and tendering process and should be based on past experience together with market norms and standards. Although the estimate will have an input into all areas of the project here the investigation will be restricted to cost and time estimating.

Some of the common pitfalls when estimating are as follows:

- Misinterpreting the scope of work and omissions.
- Creating a poorly defined or overly optimistic schedule.
- Overestimating the reliability of the output of an unskilled workforce
- No consideration of risk and uncertainty
- Escalation not considered.
- If work is priced out at an average rate, regardless of who is doing the work, this simplifies the estimating but the Employer may not be happy paying Engineers' rates for tradesmen.
- The performance of individuals within a trade can vary considerably depending on ability and commitment.
- Lack of historical data, especially if this is a new type of project for the company.
- Undercutting profit to obtain the work.
- Using too much new technology. Keep new technology to a minimum (between 5% and 10% is recommended). This helps to keep the amount of teething problems to a minimum.
- The Main Contractor is at risk if he/she/she has to give a fixed price quotation to the Employer based on budget estimates from his/her sub-Contractors. The sub-Contractors prefer to give fixed quotations when the detailed drawings are finished and these are often only ready just-in-time for construction.
- Not including increased productivity if your project involves a certain amount of repetitive work. It is not unreasonable to assume a "learning curve", which will tend to increase productivity by reducing Mandays per unit.
- Not making sure all objectives are attainable.
- Expenses often forgotten when estimating include:
  a) Commissioning and customer acceptance
  b) Training
  c) Protective clothing
  d) User manuals
- Terms and conditions of contract not quantified.
- Validity of quotations not taken into account. Quotations are normally valid for 30 days, if a definite time is not stated.

3.2 LABOUR SELECTION, RECRUITMENT AND INDUCTION PROCEDURES ARE APPLIED TO PROJECTS ACCORDING TO LIC PRINCIPLES

Learning Activity Outcomes

This section of Assessment Criteria will enable you to:

Understand and be able to organise labour selection, recruitment and induction according to LIC procedures

SUITABLY QUALIFIED PERSONS WHO HAVE A SOUND UNDERSTANDING OF LIC METHODS, SYSTEMS AND TECHNIQUES SHOULD PERFORM THE SELECTION, RECRUITMENT AND INDUCTION OF LABOUR ON A PROJECT. FOR THIS REASON IT IS GOOD PRACTICE TO FIRST TRAIN THE LIAISON OFFICER IN THESE MATTERS PRIOR TO EMPLOYING LABOUR

3.2.1 LIC PROJECT STAFF REQUIREMENT GUIDE

A reasonable size contract will need the following staff:

- A Project Manager (either full- or part-time)
- A Site Agent responsible for all aspects of the particular contract.
- A Resident Engineer (RE) to transmit the Engineers instructions to the Contractor. This person must have some knowledge of the work being supervised. The RE should, where appropriate, have the authority to agree quantities and classification of materials. The RE records attendance and production of each task as it is completed. These records are submitted to the Contractor for approval. .
- A Surveyor with the basic skills of engineering survey. Project management staff provides the setting out details for all works and the Survey decides on alignment, sets up profiles and establishes levels at regular intervals throughout the contract to suit the Contractor's progress.
- A Chief Clerk who is competent and experienced in order to be responsible for all clerical and stores functions. In particular his/her responsibilities should include the monitoring of the production records from Inspectors and the reduction of the quantities into payment certificates.
- A Storeman and assistants to receive and issue materials – an important and responsible task.
- Support staff, such as reception, secretarial, cleaning and kitchen staff is employed depending on the size and nature of the contract. Certain casual labourers may be employed to carry out certain functions such as searching for existing services.

3.2.2 LABOUR RECRUITMENT

Once the planning has been completed and the number of labourers that will be required are known, recruitment can begin in earnest.

Labour and staffing requirements should be widely advertised in the local community, clearly setting out selection criteria that have been agreed by the Steering Committee. The jobs desk should handle applications. The contractor must do the final selection.

Selection must be done in terms of the project specifications that will include gender, youth and disabled requirements. In terms of the Expanded Public Works Programme, the requirements are that workers are employed in the following proportions:

- 55% women;
- 40% youth from the ages of 16 to 35; and
- 2% on persons with disabilities.

Please check the project specifications for the actual requirements on your project.

1. Agreements

As the construction work is to be done labour-intensively, labour is fundamental to the project and requires a correspondingly large input. During the project pre-planning, contact should have been made with the community and various assessments made. These assessments would have included the availability of labour, their skills profiles and their training needs. The training needs would probably have been included in the tender documents.

For the Conditions of Employment Refer to ADDENDUM - "Guidelines for the Implementation of Labour-intensive Projects under the Expanded Public Works Programme (EPWP)"

These conditions of employment must be communicated to all workers, and enforced. If multiple tasks are permitted, the rules governing the setting, quality control and payment for multiple tasks must be clearly set down and understood.

2. Induction

An Induction Course is usually the introduction of the Labour-intensive system of construction to the work force. The principles of task work and "no work, no pay" should form the basis of the conditions of employment. The Conditions of Employment form an essential part of the induction course. Conditions for employment must be agreed with the Steering Committee

Safety training must form part of the induction and must include hazard identification on a construction site. The first two weeks on a construction site are the most dangerous for a worker. Particular attention must be given to the safety education of all temporary labour.

Safety-related personal protective equipment should be shown and its use demonstrated. Care and maintenance of safety gear must also be explained.

For example; how should the filter element of a dust mask be replaced and how often? Company policy about replacement of worn protective gear must be carefully explained. For example, how frequently will the company issue new gloves/overalls/boots/etc?

3. Training

Training should be undertaken timeously. Skills courses must be properly planned and programmed. Particular attention must be given to LIC methods in the training. People need to be trained in particular skills in time for these skills to be used on construction. As far as is possible training must be accredited and therefore transferable. Accreditation procedures must then be followed so that certificates of competency can be issued. The project specification will lay down the contract requirements.

3.2.3 STEERING COMMITTEE

The contractor should appoint a full-time liaison officer who will form the link between the contractor and the Steering Committee. Communication in both directions is essential to the smooth running of the construction project. Labour problems must be dealt with promptly and efficiently and the help of the Steering Committee members may be found to be important in minimising potential conflict.

It is advisable to set up a “jobs desk”, where labour recruitment and lay-offs are dealt with. On a small project it can be run by the liaison officer but on a larger project will require independent staffing. The desk will need clear policies and procedure to be able to function effectively.

3.2.4 LEGAL AND STATUTORY REQUIREMENTS PERTAINING TO LIC PROJECTS

There are many legal and statutory requirements that contractors must comply with. LIC projects are not exempt from these requirements.

The following extract from the document – “Guidelines for the Implementation for Labour-intensive Projects under the Expanded Works Programme” (EPWP), explains the source information:

Topic	Reference	Obtainable from
Conditions of Employment	Code of Code of Good Practice for Employment and Conditions of Work for Special Public Works Programmes Ministerial Determination: Special Public Works Programmes	Department of Public Works Department of Labour
Minimum wage	Wage determination for the EPWP – see also sub-Clause 13.2 in the 2012 Ministerial Determination	Department of Labour
Maximum wage	Wage determination for the Civil Engineering Sector	**www.safcec.org.za** under the section "human resources"
Monitoring the employment of workers/ compliance with the provisions of SANS 1914-5	SANS 10396, Implementing Preferential Procurement Policies Using Targeted Procurement Procedures Annex G: Implementing employment intensive infrastructure projects which target the increase of employment opportunities generating per unit of expenditure Annex J: Third party management support	Standards South Africa (division of the South African Bureau of Standards)

1. Systems for measurement and recording

A self-checking system should be established to **record attendance, tasks allocated and tasks completed**. As completed tasks are the basis of payment, accuracy is paramount and must be demonstrable. Independent checks should be built into the system.

For example: a wage clerk can fill in the daily attendance register; a team leader can allocate and record the tasks set in the tasks register, while a supervisor or inspector can check quality and completion of tasks. 100% agreement between the three records is essential for payment. Whatever system is chosen, constant checking is essential to find discrepancies early and to eliminate fraud.

2. Payment of wages

Regular and accurate payment of wages is essential for the continuance of the project. Wages must be paid on time. No matter gives more problems more quickly than wage discrepancies or late payment of wages. Special arrangements may have to be made for the payment of wages and local suppliers. Carrying large amounts of cash is not recommended due to the high incidence of crime. Some success has been achieved in the payment of wages by electronic banking methods, which require every worker to open a bank account with one particular bank. Should this method be chosen banking methods and rules should be included in the induction training. Time should be made available during induction to transport every person to a bank branch for the purpose of opening an account.

Note that this will have to be done in batches, as bank staff is limited and the process fairly lengthy. Simply swamping the bank with a horde of new customer will cause ill feeling where pro-active co-operation is wanted.

3.3 INDIVIDUAL AND GROUP TASKS ARE AGREED ACCORDING TO LIC PROCEDURES

Learning Activity Outcomes

This section of Assessment Criteria will enable you to:

Allocate, measure and record agreed, individual and group tasks according to LIC procedures

TASK WORK NEEDS TO BE ALLOCATED, MEASURED AND RECORDED ACCURATELY BY THE SUPERVISOR. IT ALSO NEEDS TO BE BALANCED, THAT IS, GROUPS OF WORKERS NEED TO WORK AT SIMILAR SPEEDS, SO THAT NO PORTION OF THE WORK LAGS OR LEADS THE REST BY TOO MUCH

3.3.1 ALLOCATE TASK WORK

The tasks are allocated to the construction workers on the basis of the planning of resources done as illustrated in **Section 3.1.1 ESTIMATE LABOUR REQUIREMENTS 3.1** The team leaders are made responsible for showing their team workers how the work should be done and for setting out the tasks.

1. Task balance

Task balance is particularly important when one group of workers produces something for other groups to use. For example, borrow excavation must keep ahead of loading and transportation of the borrow materials, and these in turn, must keep ahead of spreading and compaction operations.

The supervisor sets the tasks and decides if the tasks should be done individually or by groups. The advantage of doing team or group tasks is that the people in the group can change places during the work. If one kind of work is hard and another kind of easy, then it is sensible that the hard work is shared equally between all the people, and that when someone has just finished a piece of the hard work, he/she/she can rest while doing the easy work. Sharing like this means that no one person has to work harder than anyone else and that all the work gets finished at the same time.

Every operation needs to be split into activities and the activities into tasks. The activities need to be balanced so that no activity is completed long before another or lags far behind another, particularly if one activity feeds into another.

For example, a cut to fill operation will be split into several activities like:

- Excavate the cut
- Transport the loose soil and tip into the fill area
- Water, mix and spread the fill
- Compact the fill and reshape during compaction

Note that the excavated soil is transported, watered, mixed, spread and compacted. Each activity is dependent upon the previous one and the rate of work in each activity must be balanced in order to achieve a continuous process. Several calculations are needed to achieve this balance.

2. Calculations

The amount of work in each activity must be accurately measured or calculated in metres, square metres or cubic metres. The work quantity must be measured in the same units as the task. If this is not so, then the quantity must be converted to the task units, or the task rates converted to the quantity units, using the geometric relationships on the site. See examples 3.3.1 and 3.3.2 below. The appropriate task rates are chosen from **Table 2 – Standard Tasks** and the number of man-days necessary to complete the activity are calculated. Then the time needed for the activity can be calculated if the team size is known, or the team size can be calculated if the time available for the activity is known. Team sizes are adjusted until the activities are completed in similar time intervals. The calculations also help in assessing the resources needed, like tools, transport units, etc.

Example 3.3.1

A borrow area must be cleared of grass and the roots dug out to a depth of 150 mm and removed to a nearby dump. The agreed task size for clearing dense grass is 40 m^2/md. The loose topsoil (200 mm thick when bulked up) is then to be loaded into wheelbarrows and transported to a stockpile 80 m away across level ground. The task for haulage is 2.0 m^3/md. The gravel now exposed is to be excavated to a depth of 01m and thrown onto heaps for later removal. The task is 2.0 m^3/md. For a balanced operation how many workers will be needed?

Answer 3.3.1

Calculate the minimum number of workers for balance: the work can be scaled up if greater speed is required.

Convert all the activity task rates to square metres:

Clearing is given as 40 m^2/md

Haul 2m^3 topsoil per man-day at 0.20 m thick gives $\frac{2}{0.2}$ = 10 m^2/md

Excavate 2 m^3 gravel per man-day at 01 m thick gives $\frac{2}{1}$ = 2 m^2/md

Now take the lowest common multiple of the task rates which is 40 m2

Use this figure as the quantity Q and calculate the man-days per activity, using Equation 1.

Clearing: $\frac{quantity}{task} = \frac{40}{40}$ = 1 md

Haul: $\frac{quantity}{task} = \frac{40}{10}$ = 4 md

Excavate: $\frac{quantity}{task} = \frac{40}{2}$ = <u>20 md</u>

Total man-days = 25

For this amount of work to be done per day, 25 workers will be needed, split into 1 clearing, 4 hauling and 20 excavating.

Check 1 worker clearing at 40 m2/md will clear 40 m2

4 workers hauling at 2 m^3/md will remove soil from an area of 4 x $\frac{2}{0.2}$ = 40 m2

20 workers excavating will dig up an area of 20 x $\frac{2}{1}$ = 40 m2

The areas are all the same so no mistakes were made during the calculation.

TASKWORK NEEDS TO BE MEASURED AND RECORDED FOR PAYMENT OF THE TASK WORKERS

3.3.2 MEASUREMENT AND RECORDING SYSTEM

A measurement and recording system should be established to record attendance, tasks allocated and tasks completed. As completed tasks are the basis of payment, accuracy is important.

1. Measurement of task work

Measurements of completed tasks must be made so that the correct payment can be made to the workers and so that productivity and progress can be compared to the planning and programme.

When tasks are inspected, both the amount of work must be measured and the quality must be checked. It is most important that quality is not neglected but is inspected and measured daily, as this keeps the workers and the team leader alert to the standards required for the completed work.

Actual productivity must be calculated daily and compared to the planned productivity. Only by constant attention can productivity be kept high or even improved upon.

2. Records of task work

The EPWP Guidelines document requires the following minimum records to be kept (check the project specification for the project requirements): "Every employer must keep a written record of at least the following:

1. The worker's name and position;
2. In the case of a task-rated worker, the number of tasks completed by the worker;
3. In the case of a time-rated worker, the time worked by the worker;
4. Payments made to each worker.

3.3.3 SITE PRODUCTIVITY

Productivity has to do with the **efficiency** of production, making a site more productive means getting more output for less cost in a shorter period of time. What is production on a construction site? It covers every activity that goes into construction. Improving productivity for these operations means carrying them out at lower cost, in less time, with fewer workers, or with less equipment but to the required specification standard. Cost, time, workers and equipment are examples of what you put **into** production. The **less** you put in to what is **produced**, the higher the productivity.

Productivity can be raised in 4 ways:

- The same is produced, but less is put into production
- More is produced with the same inputs
- More is produced and less is put into production
- More is produced **and** more is put into production, but the increase in production is bigger than the increase in inputs

Example: Showing the 4 different ways in which productivity can be raised for the digging of a trench:

Ways of raising productivity	Examples
1. The same is produced, but less is put into production	Due to the narrow width of the ditch, 2 workers can excavate as much per day as 3 do at present. By taking 1 worker out the input is reduced. Production is the same so productivity is raised.
2. More is produced with the same inputs	The method of digging the ditch is improved so that they are now able to excavate $10m^3$ in lieu of $8m^3$ with the same tools and the same number of workers. The inputs are the same, but production has gone up by $2m^3$, so productivity is raised
3. More is produced and less is put into production	1 worker is taken out and the 2 remaining ones excavate $10m^3$ per day. Inputs are reduced by 1 worker, production is increased by $2m^3$, so productivity is raised.
4. More is produced **and** more is put into production, but the increase in production is bigger than the increase in inputs	The workers' pay is increased by 20%. This encourages them to produce 40% more. Since production has increased twice as much as the inputs, productivity is raises.

There are other production inputs that are important, and that have to be looked at when you want to raise productivity as they are not always obvious, e.g.:

Materials	By not wasting materials, less materials have to be bought and the saving is a direct profit for the Contractor
Supervision	If increasing the quality (and even cost) of Supervision leads to a rise in production, there is scope for productivity improvement
Effort	If an operation can be done just as quickly, but with less effort, the productivity of the operation is increased

1. Site activity level monitoring

The activity level on a site is a measure of what proportion of the time workers are active and what proportion of the time they are idle. It is recorded by making several tours of the site. Each time you note whether a worker is working or not working. This is expressed as a percentage of the total number of observations. A high activity level indicates that workers are busy most of the time.

1. **A person is to be recorded as working when he/she is:**
    1. actually working;
    2. receiving or relaying instructions;
    3. taking a short rest;
    4. walking to the next task;
    5. fetching water;
    6. waiting in short periods.

2. **A person is to be recorded as not working when he/she is:**
    1. not present due to starting late or finishing early;
    2. taking unnecessary rest breaks;
    3. spending unnecessary long periods waiting for other operations to finish.

The general activity level should lie between 60% and 80% depending on the climate and how heavy the work is. If the level of work between a gang of workers is too low, some should be taken out and put to work elsewhere on the site.

2. Monitoring and Evaluation

Using project records, there must be ongoing assessment and evaluation of the project.

The overall objective of the project may be:

- Creation of employment, or
- Inexpensive construction, or
- Local economic stimulation

These objectives need to be reviewed on an ongoing basis so that new direction can be given if necessary.

Involvement of the funding authority in assessments is essential as some necessary adaptations may involve them directly. The continued commitment and enthusiasm of the Project Sponsor is a prerequisite for successful control, progress and completion of the project.

Further assessment of the long-term effects of an LIC project on the community can be assessed and will provide information of interest to sponsors for future projects.

In order for lessons to be learnt and for the programme to improve with time, it is essential that mechanisms for M&E are put into place. All the parties on the project must agree to their work being monitored.

M&E is also important to ensure that the criteria themselves are adequate.

Mistakes will be made – we need to learn from them rather than repeat them over and over again. Lessons learnt at a provincial and national level should therefore be shared.

Cost effective labour techniques are being developed all the time through a process of “learning by doing”.

M&E can assist in this process.

M&E and good supervision procedures should allow the smooth flow of information and directives in such a way that corrective action can be taken if necessary within a relatively short space of time.

3.4 APPROPRIATE PLANT, EQUIPMENT AND TOOLS ARE APPLIED ACCORDING TO LIC PRINCIPLES AND ACTIVITY REQUIREMENTS

Learning Activity Outcomes

This section of Assessment Criteria will enable you to:

Be able to select and manage the use of appropriate plant, equipment and tools according to LIC procedures

PLANT AND EQUIPMENT USED TO SUPPORT LABOUR-INTENSIVE CONSTRUCTION ACTIVITIES MUST BE CAREFULLY CHOSEN AND CAREFULLY CONTROLLED. SAFETY IS CRITICAL, PEOPLE AND MACHINES DO NOT MIX WELL AND SAFETY PRECAUTIONS MUST BE ENFORCED

3.4.1 TOOL AND EQUIPMENT

Good quality tools and equipment enhance productivity. Tools need maintenance just as much as plant.

Regular sharpening of picks and shovels help to keep productivity levels high. Worn-out tools reduce productivity. A system is needed that checks on tools on a regular basis.

Equipment and plant that support labour-intensive construction activities must be carefully chosen and carefully controlled.

Various reference books have relevant information:

1. "Guidelines to tools and equipment for labour-based construction". Compiled by JDGF Howe, published by the International Labour Organisation, Geneva, 1981.
2. "Labour-based construction programs – a practical guide for planning and management". Compiled & edited by B Coukis et al, published by Oxford University Press for World Bank, 1983

1. Safety

The Occupational Health and Safety Act require every contractor to observe the following requirements during the construction period:

- Hazard identification, risk assessment and mitigation throughout the contract [this means preventing machines from running over and killing workers and teaching workers to stay out of the way of machines].
- Inspections must be made in accordance with the regulations (excavations, scaffolding, ladders, electrical equipment, lifting equipment etc.) [All tools, equipment and machines must be inspected for safety]

- Personal protective equipment needs to be issued, maintained and controlled where necessary [for example: workers using hammers or grinders must wear goggles]
- Operator training and re-training as site conditions change.

Safety must be management-driven, but must also be made the concern of every supervisor and worker on the site. Regular “tool box talks” give the team leaders the opportunity to discuss safety issues with their teams and to invite supervisors or site managers to explain certain safety matters. It is essential that safety is brought up as often as possible, so that no one has the excuse that he/she/she forgot!

2. Productivity (Plant versus Labour)

The major problem in the choice of plant is to balance the productivity of the machine with that of labour. Very large and highly productive machines cannot be kept economically busy, and yet, small pedestrian-controlled machines rarely produce enough. A compromise must be found, where the production of a number of labour teams gives enough work to keep a medium-sized machine productively employed.

For example, look at experience gained on construction of a water-bound macadam base. Teams of five labourers each were found capable of placing macadam stone to a lane width of 4 m at 8 m^3 per person per day. By using several placing teams, productivity was sufficiently high to fully occupy a 12 tonne Bomag 212D roller in initial compaction, compaction during spreading of fines and for final slushing. This particular subcontractor was able to produce base to specification at a speed quicker than a conventional machine-based sub base spread was able to lay sub base in front of the base course.

If a bulldozer is on the site or can be hired from a nearby site at a reasonable price, then consideration must be given to ripping borrow pits prior to hand-excavation and stockpiling of gravel. A pickable material can be turned into a firm and even loose material, with a considerable increase in excavation productivity, just by cross ripping (ripping the material once in one direction and then again at right angles). The costs can quite easily be calculated and compared.

Hard rock on rock intrusions can often be tackled with pneumatic equipment: an air compressor driving a few paving breakers or a few rock drills. If the rock occurs on a small scale, it will not be worth the trouble and effort to bring in a blaster to remove the rock with high explosive (permits, storage of explosives, safety precautions, etc). Consideration should, in this case, be given to “low explosives” or expanding slurries that, when poured into holes drilled in the rock, expand over a few hours and split the rock. Some advice on hole spacing is needed, but the method is clean and relatively quick.

Transportation of materials by truck will be necessary when haul distances are large. Because of the height of a Tipper trucks sides loading by hand becomes slow. However, with proper planning of borrow pits, a loading slot can be excavated and the trucks can be loaded from a higher level, thereby increasing productivity. The advantage of tipper trucks is that they can unload without the assistance of labour.

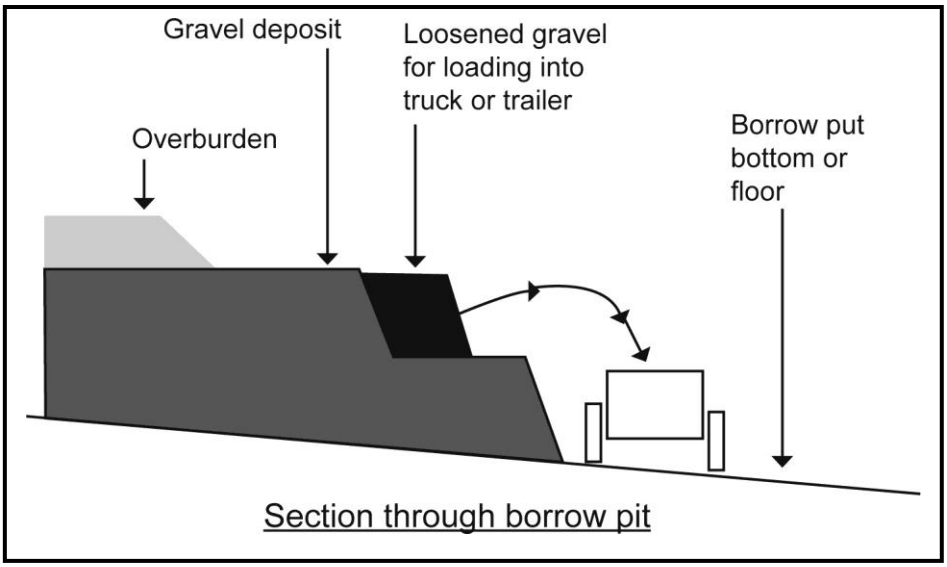

Figure 12 – Section through Borrow Pit

Loading height to Truck in meters	Loading productivity per day in m^3
Below ground level	4.7
Level with ground	4.2
0.5 m above ground level	3.6
01 m above	3.0
1.5 m above	2.5
2.0 m above	2.0

[Reference: Coukis @ 80%]

Table 12 – Influence of Loading Height on Productivity

Flat-bed trucks with drop-sides are relatively low and can be loaded reasonably quickly. Off-loading requires labour, but the hinged sides do simplify the work of off-loading gravel or soil.

Donkey-drawn carts can be efficiently utilised for hauls of up to about 2 km and, if self-tipping, are quick to offload. Tractor-drawn trailers can be efficient if carefully planned and controlled. Tractors with single trailers probably cost more than truck transport, but if several trailers are available for each tractor unit, then one trailer can be left in the borrow pit for loading while a full trailer is being hauled to the site. Tipping trailers offload quickly; semi-tipping trailers require some labour to assist in offloading the last part of the load, while non-tipping trailers must be offloaded completely by hand. Obviously haul distance plays a major part in decision-making.

3. Special tools

Suitable tools for specialised work will have to be procured timeously. For example, if precast concrete sections are needed on the site, consideration should be given to on-site manufacture. Moulds will be needed and possibly other specialised tools to improve productivity.

Macadam base course materials are suitable for hand placement. Generally level control is achieved by means of rail-mounted or shutter-mounted straight or cranked beams. The loose stone is placed in front of the beam to the level of the underside of the beam, in strips of about 0.5 to 0.75 m wide. The beam is then rolled forward and the process is repeated. These shutters and beams must be designed and manufactured timeously.

4. Productivity

It is advisable to maintain accurate daily records of production so that productivity can be calculated for every activity. This helps to “fine tune” resources or methods to improve the productivity.

5. Quality testing

Some equipment will be needed for testing of materials. This will need planning, as it depends largely on the specification. The use of a Dynamic Cone Penetrometer (DCP) is advocated for density and strength testing of compacted materials. The DCP Number can be correlated to density by comparative testing using an outside laboratory testing service, particularly if the DCP is used immediately after compaction has been completed and the material is still near to optimum moisture content (DCP is strongly affected by soil moisture content).

The Dynamic Cone Penetrometer (DCP) is a portable tool comprising a rod with a pointed end, which is driven into the ground or road layer with a weight sliding the rod between two stops. The penetration is measured every blow or every five blows and is converted to CBR strength from a table.

The formula CBR = $\frac{401.8}{(DCPNumber)^{\frac{1.284}{}}}$ can be used.

The test is done with at least two people, one person supporting the DCP and operating the sliding hammer, while the second takes readings and writes them into the form. The penetration or DPC numbers are the successive differences between the rule readings taken at the top of the upper clamp.

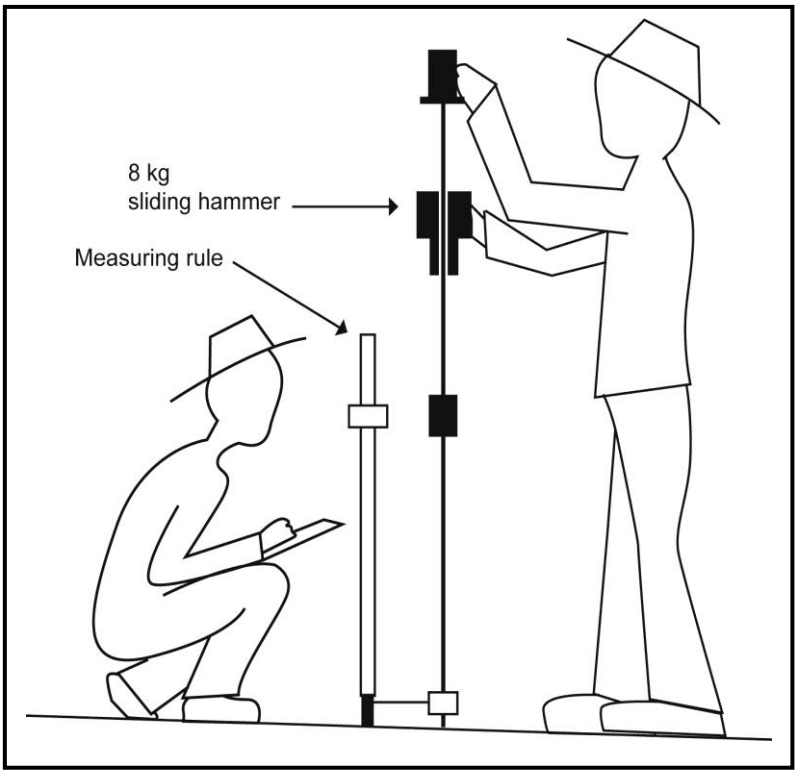

Figure 13 - Dynamic Cone Penetrometer

When measuring strength with a DCP, the following recording format is used:

DYNAMIC CONE PENETROMETER TEST

Road: ……

Position: ……...

Tested by: ……Date: …….

Blow number	Reading mm	Depth mm	Difference mm/blow = DCP Number
0 1 2 3 4 5 etc			

Conclusions: ……

……

Table 13 – Dynamic Cone Penetrometer Test Record

1. The DCP is first assembled and the joints tightened with spanners. The instrument is then brought to the place where the test is to be done and the measuring rule is clipped on.
2. While the DCP is held vertically, point resting on the ground, a zero reading is taken where the upper clamp or ring touches the rule.
3. This reading is written into the “Reading” column opposite “Blow number O”.
4. The hammer is then raised to the upper stop and released to fall vertically onto the lower stop, driving the point of the DCP some distance into the ground. The reading (where the ring touches the rule) is written into the “Reading” column opposite “Blow number 1”.
5. The hammer is then raised again and released to drive the point further. After each blow the reading on the rule is recorded.
6. The depth of the point is calculated by subtracting from the “Reading” the initial zero reading.
7. The “Difference” column is filled in by subtracting each reading from the previous one, so that the amount that the point was driven into the ground per blow, is calculated for every blow.

Precautions needed are:

- Keep hands away from the stops to prevent them from being pinched by the hammer
- Hold the DCP vertically all the time
- Read the rule strictly horizontally
- Let the hammer fall freely from the upper to the lower stops
- Tighten the point and the rod joints regularly as they tend to work loose.

The DCP is used to measure the strength of local soils during the structural design of a road and to check whether the construction of the road actually achieved the desired CBR strengths. It can also be used to check the uniformity of compaction of any earthworks. DCP values are adversely affected by water i.e. lower strength values are obtained when the soil is wet. Conversely, if the soil is dry when tested with the DCP, falsely high strength values will be obtained. Hence, DCP values should be measured as far as possible on soils at the moisture content that the layer is expected to reach during its lifetime in the road. The moisture content will normally be close to the optimum moisture content of the soil. If the DCP is measured immediately after the road layer has been compacted, the soil should still be at or near optimum and a reasonably true value will be obtained.

DYNAMIC CONE PENETROMETER TEST

Road: SCHOOL ROAD CHAINAGE 0+250 m
Position: CENTRE
Tested by: PETER Date: 5 MARCH

Blow number	Reading mm	Depth mm	Difference mm/blow = DCP Number
0	85	0	0
1	101	16	16

DYNAMIC CONE PENETROMETER TEST

Road: SCHOOL ROAD CHAINAGE 0+250 m
Position: CENTRE
Tested by: PETER Date: 5 MARCH

Blow number	Reading mm	Depth mm	Difference mm/blow = DCP Number
2	116	31	15
3	130	45	14
4	145	60	15
5	161	76	16
6	175	90	14
7	190	105	15
8	204	119	14
9	230	145	26
10	256	171	26
11	281	196	25
12	305	220	24
13	332	247	27
14	367	282	35

Conclusions: UPPER LAYER IS 119 mm THICK, CBR = 12 %
LOWER LAYER IS 128 mm THICK, CBR = 6 %

Table 14 – Dynamic Cone Penetrometer Results

First layer: 0 to 119 mm, thickness is 119 mm [This depth is where the DCP number changes from about 15 to about 26]

DCP Number = Average penetration = 119/8 = 15 mm per blow [round to nearest whole number]

Use formula CBR = $\frac{401.8}{(DCPNumber)^{\frac{1.284}{}}}$

Equivalent to CBR = 12 % [to nearest whole number]

Second layer: 119 to 247 mm, thickness is 128 mm [this depth is where the DCP number changes from about 26 to 25]

DCP Number = 128/5 = 26 mm per blow

Use formula CBR = $\frac{401.8}{(DCPNumber)^{\frac{1.284}{}}}$

Equivalent to CBR = 6 % [to nearest whole number]

3.5 MATERIAL RESOURCES ARE IDENTIFIED AND PROCURED TIMEOUSLY ACCORDING TO THE REQUIREMENTS OF THE PROGRAMME

Learning Activity Outcomes

This section of Assessment Criteria will enable you to:

Be able to identify and procure timeously material resources according to the requirements of the programme.

LOCAL MATERIALS SHOULD BE USED AS FAR AS POSSIBLE, AS THESE OFTEN REQUIRE ONLY LABOUR RESOURCES AS INPUT AND CAN INCREASE THE WAGES LEFT IN THE COMMUNITY

3.5.1 MATERIALS

1. Material Requirements

Materials because of their size or mass that are inappropriate for manhandling should not be used on LIC projects. Where suitable materials are not covered by the standard specifications, they should be included by a way of appropriate project specification clauses. Where materials such as kerbs, channels and masonry units are to be manufactured on site these should be listed and the quality required specified. Local material should be used where possible.

2. Local Materials

The cost involved in using local materials is basically a labour cost of gathering the local natural resources. The following local materials are often part of the natural resources of an area that can be used on a LIC road project:

- Gravel
- Stones/rocks
- River sand
- Pit sand
- Clean water
- Trees

1. Gravels

Local gravels can be used as follows:

- Good gravels which are quarried, located and proved in the vicinity of the construction site and which meet the specification without the need for a stabilising agent, are natural agents which are placed on the formation to form the wearing course of an unsurfaced road.

- Quartzitic gravels, if they are sieved and the sieved quartzite stones are washed, make a good aggregate for concrete.
- Fine, graded granite makes good bedding for concrete storm water pipe culverts and plastic sleeves for services such as electric cables or water supply lines.

2. Stones/Rocks

Un-weathered rocks of manageable size as well as stone can be collected and used for the following:

- Stone masonry walls
- Headwalls and wing-walls
- Cut-off walls for drifts and vented fords
- Gabion baskets/reno-mattresses
- River-bed spawls (stone) can be used as “plumbs” for mass concrete laying operation
- Stone can be used to construct scour checks
- Dry stone packing
- Stone pitching or general masonry work

3. River sand

This can be used for the following:

- Concrete
- Concrete pipe culvert bedding
- On-site block-making
- Base bedding for road-blocks (paving blocks)
- As a binder added to crusher-run which is low in “fines” content.

4. Pit sand

This is used for mortar and plastering

5. Clean Water

Water is vital for the following:

- Drinking water
- Concrete and mortar
- Compaction

6. Trees

Trees that have to be cleared from the site can be cut to size and used for the following purposes:

- Shoring in deep excavations for structures such as storm water pipe trenches and manholes

- Road sign poles
- Posts in the construction of soil erosion protection
- Fencing posts
- Firewood
- Scaffolding and temporary support structures

These materials make use of local labour for excavation and loading and could use local transport. Occasionally client approved local quarries or borrow pits are made available to the project (test results are often provided in this case).

To import materials (and manpower) from outside the project area is normally not cost-effective when acceptable-quality materials (and manpower) are locally available. Also the use of transported-in manufactured materials can substantially reduce the wages left in the community. Examples are factory-made precast concrete pipe, box culvert and manhole sections. If precast concrete sections are needed on the site, consideration should be given to on-site manufacture. Local industry should be encouraged where possible. Where quality specifications exclude local products, assistance may be given to improve quality to the requisite levels. Alternatively, training can be given to the local workmen or artisans to set up as suppliers or subcontractors. High quality raw materials can be procured through the construction contract for their use.

When choosing local materials or local production of construction products, you must take account of the time needed to set up production and the speed at which the materials or products can be delivered. For example, if a local quarry is to be used, it must first be cleared and opened up before any stone can be delivered to the site. Establishment of the quarry will take some time. If delivery is to use local transport, is that transport in good condition or will the contractor need to repair or pay for repairs to the transport? Experience has shown that punctures to old and worn-out tyres are a major source of delay. Materials for the project should be chosen on the basis of the labour that will be required to handle and place them. Some of the considerations are those of weight and toxicity.

For example:

- *Precast concrete elements must be sized to be manhandled. On smooth ground, labourers can be expected to carry items up to 50 kg mass. This must be reduced on rough and uneven ground. Special slings or clamps can be used to afford handholds to several people at once, thus spreading the load amongst more labourers. Precast concrete pipes can be carried if a long pole is pushed into and through the pipe, giving handholds to three or four people at each end of the pipe. Alternatively, elements can be made smaller and can be joined together.*

- *Toxic materials must be avoided altogether, if at all possible. If not, adequate personal protective gear must be provided and its use enforced. This may be more difficult than it at first seems, due to the environmental conditions of heat and humidity. People do not like to wear goggles, heavy overalls and gloves when the ambient temperature may be as high as 38 ºC. Tar products and several paints or coatings are toxic, but can generally be substituted by less toxic or harmless products, if sufficient trouble is taken to source such products.*

Continuously graded crushed stone base courses are not particularly suited to hand placement, due to segregation and difficulty of achieving the needed high density. However, by using modified concrete placing techniques, the segregation can be controlled: by saturating the crushed stone with water, sufficient apparent cohesion can be given to the material to allow it to be placed between shutters and screeded to level. After removal of the shuttering, compaction can be done across the full width. Note however, that pedestrian-controlled compactors do not have the weight to adequately compact crushed stone to base course density requirements.

OUTCOME

4

4 OUTCOME 4: TRAIN, COACH AND DEVELOP PROJECT TEAM MEMBERS IN LIC METHODS

The purpose of this Outcome is to enable you to train, coach and develop project team members in LIC methods

This Outcome will enable you to:

1. *To provide LIC supervisors with access to the appropriate skills & tools in order to perform their jobs competently*
2. *Provide on-job training and coaching in LIC methods to project team members*
3. *Address and communicate the developmental needs and career aspirations of team members*

4.1 LIC SUPERVISORS HAVE ACCESS TO THE APPROPRIATE SKILLS & TOOLS IN ORDER TO PERFORM THEIR JOBS COMPETENTLY

Learning Activity Outcomes

This section of Assessment Criteria will enable you to:

Train construction supervisors to perform their jobs competently

LABOUR-BASED CONSTRUCTION PROGRAMMES ARE SUPERVISORY INTENSIVE AND DUE TO THEIR SPECIALISED NATURE, REQUIRE SKILLED SUPERVISORS. IT IS ESSENTIAL TO ESTABLISH TRAINING COURSES SPECIFICALLY ADAPTED TO THE REQUIREMENTS OF LABOUR-BASED CONSTRUCTION PROGRAMMES. SUCH COURSES SHOULD HAVE A LARGE PRACTICAL COMPONENT AND EMPHASISE PEOPLE MANAGEMENT AND ORGANISATIONAL ASPECTS OF THE WORK

4.1.1 TYPICAL RESPONSIBILITIES/DUTIES OF GENERAL FOREMAN (EARTHWORKS)

- Plan
- Organise
- Control
- Co-ordinate
- Attend meetings

1. Plans production on site by:

- Studying the drawings with Site Agent and together establishing the resources required to accomplish the work as per plan and comparing with tender stage forecasts
- Studying the tender stage programme together with Site Agent and making the appropriate adjustments given present circumstances.
- Allocating resources for each activity as per programme, jointly with Site Agent.
- Making him/her/herself acquainted with the programmed activities of all aspects of the job, e.g. drainage.

2. Organises the production activities by:

- Liaising with Plant Co-ordinator at head office to arrange for the delivery of specific items of plant as previously booked
- Discussing with Site Agent the need for additional plant to be hired from external sources to compliment own plant
- Instructing Foreman on sources of materials and disposal sites (borrow pit and spoil area)

- Liaising with Surveyor in charge for the timely setting out of work
- Instructing Soils Technician on what tests to conduct, where and when
- Liaising with Resident Engineer/ Clerk of Works to inspect specific sections of work for acceptance of work completed and/or possible variations of work required
- Directing Foreman daily programme requirements and monitoring performance
- Providing feedback on the previous days production and discussing corrective measures where necessary
- Rescheduling resources following unexpected occurrences, e.g. down time of prime mover, weather, delay by other sections, etc
- Ordering of programmed delivery of materials from suppliers

3. Controls production and resources on site by:

- Monitoring the daily output of each item of plant and comparing it with the expected output
- Analysing the discrepancies in performance and discussing with all concerned and issuing corrective measures
- Monitoring daily production by each Foreman's team
- Recording daily production for various items and analysing trends
- Reporting back to Foreman on the previous days performance achieved and discussing improvements or method changes
- Setting up productivity monitoring systems to measure performance and highlight problem areas
- Agreeing with Workshop Foreman for the release of plant on site for regular maintenance
- Monitoring poor performance, unacceptable behaviour and taking appropriate disciplinary action
- Attending to grievances raised which have not been resolved by the Foreman
- Ensuring that work methods are being carried out in accordance with safe practice requirements
- Attending monthly meeting and acting on any matters raised for action by management
- Agreeing downtime of plant monthly with Workshop Foreman

4.1.2 TYPICAL RESPONSIBILITIES/DUTIES OF THE SENIOR FOREMAN (DRAINAGE)

- Planning the work to be carried out
- Organising the production requirements
- Controlling materials and people
- People management and safety
- Sub-contractors

1. Plans the work to be carried out by:

- Studying the plans, and in consultation with Site Agent, establishing the extent of job to determine quantities of material

- Discussing with Site Agent the drawing up of a work programme
- Establishing with Site Agent what the weekly output requirements are to determine the team strength as well as the plant requirements
- Rescheduling work programme after weekly meeting with Site Agent
- Rescheduling and reorganising of work teams and plant when unexpected soils/work conditions are found

2. Organises the production requirements by:

- Building up the correct number of teams to carry out the work
- Selecting team members with the suitable skills for the job
- Ordering materials in advance from the Quantity Surveyor on site by referring to the programme and drawings
- Arranging for suitable plant to be available on specific days by advising the site agent at the weekly meeting
- Liaising with the Soils Technician to come to test areas of work which are ready for inspection
- Liaising with the Resident Engineer to come and inspect areas which are ready for handing over
- Arranging for accommodation & transport for the team to and from work
- Arranging for the delivery of required materials and resources to each Section Leader in advance of requirement
- Organising, with the Surveyor, to set out sufficient work so that teams can operate in specific areas
- Organising the timeous servicing of plant with the Plant Foreman so that disruption of normal production is avoided or minimised

3. Controls and manages production by:

- Discussing with Section Leaders the job requirement on a daily basis referring to the drawings and setting standards of production and quality
- Allocating different sections of work to each Section Leader
- Delegating to Section Leaders specific areas of responsibility for production and resource utilisation
- Monitoring progress in production of each team as well as the quality of output
- Assisting and counselling Section Leaders with any work related problem encountered or anticipated
- Advising Section Leaders of work programme changes explaining reason why & agreeing on necessary changes to daily work activities
- Instructing Section Leaders on safe practices and monitoring daily that these practices are being implemented
- Monitoring absenteeism and taking the appropriate disciplinary action

- Attending to grievances raised by the team members and taking appropriate action. When not resolved, passing on to Site Agent
- Instructing the operators of plant on the production requirements and the condition of the area to be worked, from the safety aspect
- Liaising with Plant Foreman to repair plant that has defects or is producing below standards
- Monitoring the timeous delivery of materials ordered to the site, their quality, as well as the wastage of materials
- Recording the daily production in a book and submitting to Quantity Surveyor on a daily basis for measurement purposes

4.1.3 SELECTION AND TRAINING

1. Introduction

Basically, to make a success of labour-intensive construction, everyone needs training. However, as the needed skills levels vary greatly from labour to top management, much more training effort is needed at the higher levels than at the pick and shovel end.

There should be formal labour-intensive construction orientation courses for engineers and managers. This will provide understanding of the principles and objectives and can assist with staff development. For the higher managerial levels an international management course on this subject has been developed and institutionalised in Kenya. Similar courses are given in South Africa.

Generally training needs are most crucial at the level of supervisors and site foremen. The field supervisors should be capable of overall programming of the work within realistic limits set by the site(s), fundamental setting out, inspect workmanship, implementing work reporting systems and assuring reporting accuracy.

The Supervisors (or foremen) should be able to undertake detail planning of the work they are responsible for and be fully competent in the work methods to be used, as they will give the daily instructions on site and give practical training to the team leaders and the workers.

2. Selection

In order to select trainable technical staff that can undertake all the activities of road construction, there should be an entrance examination for all formal courses before recruitment. The participants should go through four stages before they are permanently employed. These are:

- Selection of potential participants via the entrance examination;
- Attaching candidates to trained staff for a week or more so that they can observe the basic methods of construction;
- Training of candidates followed by formal examinations and selection of successful candidates;

- Establishing a probation period while the candidates work on the supervision of construction projects.

3. Training (Learnerships and skills programmes)

A Learnership is a "work-based route for learning and gaining a qualification within the National Qualification Framework"/ Learnership agreements are between three parties: the Learner, the Service Provider that does the teaching, and the Company that employs the learners during his/her Learnership and gives him/her the work experience required.

A Skills Programme is learning that is done towards full unit standards and assessed against them, but is only some of the standards required for a qualification. It can be used as interim learning for later completion of a qualification.

4. Training Requirements

At site level the efficient employment of project staff is critically dependent upon:

- Trained project staff, i.e. Community-based Project Manager, Site Foreman and/or Site Supervisor, Gang/ Team Leader, Drainage and Maintenance Contractor, Manufacturing Specialists, Storekeeper, Security, Community Liaison Officer, etc.
- Conditions of employment which relate payment to production output

The trained project staff must be:

- Technically competent
- Capable of organising a group of staff labourers and their work effectively

Training is necessary to produce such project staff. During the training as much attention must be paid to character as to technical and organisational competence. In the EPWP potential project staff are required to undertake extensive training prior to engaging on EPWP projects.

One of the factors to be identified is the level and extent of skills that exist within a community. The level and extent of skills identified affects the planning of the programme. This can be undertaken via a skills audit.

4.2 ON-JOB TRAINING AND COACHING IN LIC METHODS IS PROVIDED TO PROJECT TEAM MEMBERS

Learning Activity Outcomes

This section of Assessment Criteria will enable you to:

Provide on-the-job training and coaching in LIC methods to team members

THE QUALITY AND QUANTITY OF WORK PRODUCED IS DIRECTLY PROPORTIONALLY TO THE QUALITY AND QUANTITY OF THE TRAINING GIVEN

4.2.1 ON THE JOB TRAINING FOR TEAM MEMBERS

Good workers work without close supervision, inexperienced and unwilling workers need closer attention. So the supervisor will prefer to have capable and willing workers in his/her team. However, in order to get workers to the “experienced” level they need to be systematically developed and this requires the application of training skills by the supervisor.

Employing local people to do the work will require training. On-the-job learning is the most practical way of transferring basic knowledge and skills to a group of unskilled workers on a short-term project.

A semi-skilled or specialist artisans/builders such as bricklayers should already be qualified to do this work as it will cause unnecessary delays in a short project to have to send people on bricklaying courses. The remainder of the labour forces must be trained as the job progresses so that they are able to work on similar projects again.

Use the following steps as a guide to basic on-the-job training:

1. Discuss each day’s work with the workers before they begin. Help them to see what their contribution to the day’s work will be.
2. Supervise and instruct as they work, using the relevant training material or learning resources to assist you to explain the correct construction methodology or approach.
3. Allow the learners to observe the correct way of performing a task and allow time for practice and trial and error.
4. Do not punish poor performance when workers are learning. Rather provide encouragement and reinforcement of the correct way.

”Training must achieve the following”

- Complete understanding by the worker

- Get the job done –correctly, safely and in time
- Workers should subsequently be able to work independently with minimum supervision
- Workers should know their responsibilities and who to go to in case of problems
- Waste of time must be avoided

If training achieves these aims the delegation of work to the team will be easier for the supervisor, allowing him/her more time to spend on his/her other responsibilities.

On-the-job training, if done methodically and efficiently, shouldn't take any more of your time than your normal site inspection does. Training should be instinctive in the supervisor. For example, when on a site inspection you happen to notice somebody doing a job incorrectly, you immediately help him/her right by showing him/her how it should be done.

To assist in judging workers capabilities and limitations a Capability Chart should be drawn up and used. (Use the back of your site diary and not the back of a cigarette box). This chart will match the individuals under your control against the various job tasks to be undertaken, and noting what each worker is capable of achieving. It enables the team leader to place and utilize the right people for a particular job task and will give you an advanced warning if your team is short on particular skills.

Your Capability Chart should indicate each worker in your section, and every job task the section has to do. It must indicate whether the individual is:

- Being trained on the job
- Partly trained, but still needs supervision or still needs to build up speed through practice
- Fully competent in his/her/her job in both quality and speed
- Competent to teach others to do the job
- Cannot do the job at all, but should be trained as soon as possible

By utilizing individual skills the workload is more productive, better co-operation will be seen, morale of the individual and group will be high. Development and training, utilizing individual skills is your responsibility. When done correctly your work will become a lot easier, more productive and work targets will be met.

By making the best use of individuals' ability and skills, the following advantages can be achieved:

- Makes people feel needed and part of the team
- Improves efficiency
- Increases satisfaction and commitment
- Assists in planning and delegation
- Establishes continuity of standards
- Provides status and prestige

- Encourages individual excellence
- Uses “hidden” skills

These are just a few of the advantages that can be gained by using individual skills correctly, but it does point out the importance of you getting to know what skills the individuals in your work group have.

Name	Lay Kerbs	Operate Roller	Construct “V” Drains	Install Gabions	Lay Paving Slabs
John	+	#	O	X	#
Bill	*	O	X	O	*
Bongani	O	*	O	*	X
Mohammed	X	#	X	O	O
Sipho	O	O	X	#	+
Frank	X	X	#	O	#
KEY					
+ - Being trained on the job			* - Competent to teach others		
# - Partly trained: needs supervision			X - Cannot do the task: needs training		
O - Fully competent					

Table 15 – Capability Chart

1. Pattern of Instruction

An orderly style of instruction plays an important role in the success of the instruction to be presented. From experience it has been found that there is a common pattern for all instruction which is:

- Get ready to train: preparation work
- Prepare the learner to learn: explain why he/she/she is attending
- Present the instruction
- Try out the learner: practice period with guidance
- Put the learner to work on the job and monitor with feedback

The first section is the one that most inexperienced instructors tend to neglect or see as low priority. Yet, in reality his/her should be put on top of your priority list.

2. Points to note

Prepare a breakdown sheet, giving special attention to:

- Breaking down the instruction
- Do the job or rehearse the subject beforehand, think through the subject logically
- Divide it into stages
- Select key points – such as safety

Prepare the training area:

- Get everything ready and properly arranged
- Make sure the training layout is satisfactory
- Ensure all materials are available
- Check equipment prior to use
- Prepare any aids that you are using in the instruction

Step 1	Prepare the learner to learn	Put the learner at ease	
		State the job or subject objectives	
		Check his/her existing knowledge and experience	
		Create interest in and incentive for learning	
		Ensure the correct position, organization of the subject aid that it will be pitched at the right level of learning	
Step 2	Present the training	Tell, Show, Illustrate	Work from the breakdown sheet
			One stage at a time
			Cover each key point
		Instruct Clearly	Avoid words unknown to the trainee
			Speak clearly and at a suitable level
		Instruct Completely	Miss nothing out (a good breakdown sheet will assist)
			Instruct Patiently
			Keep the trainee at ease
			Give essential information at a suitable pace
			Each learner will understand information at a different speed
			Too much information too quickly can confuse
			Unnecessary information can confuse
Step 3	Try out by the trainee	Breakdown sheet	Work from the breakdown sheet
			Get the trainee to do the work practical – he/she/she must do the work or
			He/she/she must explain his/her understanding
		Correct errors as they occur – watch for	Safety errors (anticipate problems if possible)
			Wrong order or sequence
			Faults in manipulation
			Get the trainee to identify his/her own mistakes
		Check understanding of Key Points as the job is done again	Get the trainee to explain what he/she/she does and why as he/she/she works. Give feedback of trainee performance
		Continue practice until free of error	Encourage trainee
Step 4	Put the trainee to work	The trainee must now be able to work without close supervision	Explain his/her personal responsibilities for quantity, quality and safety
			Name a person who will help
			Encourage questions
			Monitor his/her work and advise the trainee of his/her progress

Table 16 – How to Instruct

1. Site Supervisors

Site Supervisors and Assistant Site Supervisors will need to be trained to carry out duties of a basic technical nature such as:

- Measurement and calculation of areas and volumes
- Setting out
- Setting tasks
- Choosing from alternative solutions
- The recording of work done on a daily basis
- Supervision of the works to ensure standards are achieved
- Balancing labour for each operation

4.2.2 COACHING

Everyone that goes through a training programme, be it simple or complex, enters into a learning curve. Each individual's learning curve will differ before they reach competency. It may differ in terms of time or proficiency levels. The training process is far from finished after the instruction stage. The trainee still needs to be monitored and guided along the path to success until he/she/she reaches a point where he/she is self-sufficient in the particular work area. The aim of training is to facilitate (guide) the trainee to reach an accepted standard of workmanship. This means his/her progress has to be monitored.

The monitoring progress can be done by the instructor or by a mentor at his/her work place. The word mentor means an experienced and trusted advisor. Whoever takes the role of the mentor must be made aware of:

- His/her responsibilities in the mentoring process
- How to use man management skills
- How the learning system works

In addition knowledge in the following is also essential:

- Necessary technical expertise
- Have the ability to communicate
- Be willing to share expertise
- Have credibility, status and necessary authority
- Believe in his/her ability to identify and grow talent and above all wants to be a mentor.

A mentor's skill in identifying the various stages of the learning curve is essential; as he/she must allow the more capable workers to progress at their own pace and not hold them back. Encouragement and giving feedback must be given at all times and levels. The less capable trainee will require more individual guidance at each level, will take longer to progress, but will still need the same encouragement and feedback.

4.3 DEVELOPMENTAL NEEDS AND CAREER ASPIRATIONS OF TEAM MEMBERS ARE ADDRESSED AND COMMUNICATED

Learning Activity Outcomes

This section of Assessment Criteria will enable you to:

Ensure that the developmental needs and career aspirations of team members are addressed.

ALL PEOPLE WORKING ON A LIC SITE HAVE NEEDS IN TERMS OF THEIR OWN DEVELOPMENTAL AND FUTURE CAREERS. THESE ASPIRATIONS SHOULD BE VOICED AND COMMUNICATED TO SUPERVISORS AND MANAGERS, SO THAT THEY CAN BE INCLUDED IN THE PLANNING FOR PROVISION OF TRAINING SKILLS PROGRAMMES AND LEARNERSHIPS

4.3.1 CAREER-ORIENTATED TRAINING

All permanent staff must be properly developed, as they form the most important resource of a company. Qualified human resources are needed to complete projects successfully. Career path planning and access to skills, supervisory and management training and qualifications, should be made available to all. Regular assessment of aspirations and achievements together will promote opportunities that can be a strong motivation to personnel.

In order to be eligible to work on LIC projects, supervisors and managers have to comply with the requirements of being competent in the LIC environment. They therefore have to be trained through skills programs (or Learnerships – a full qualification) and assessed as competent. This will ensure that these LIC projects are carried out according to the criteria required.

Figure 14 – Example of a Career Path for a Roads Company

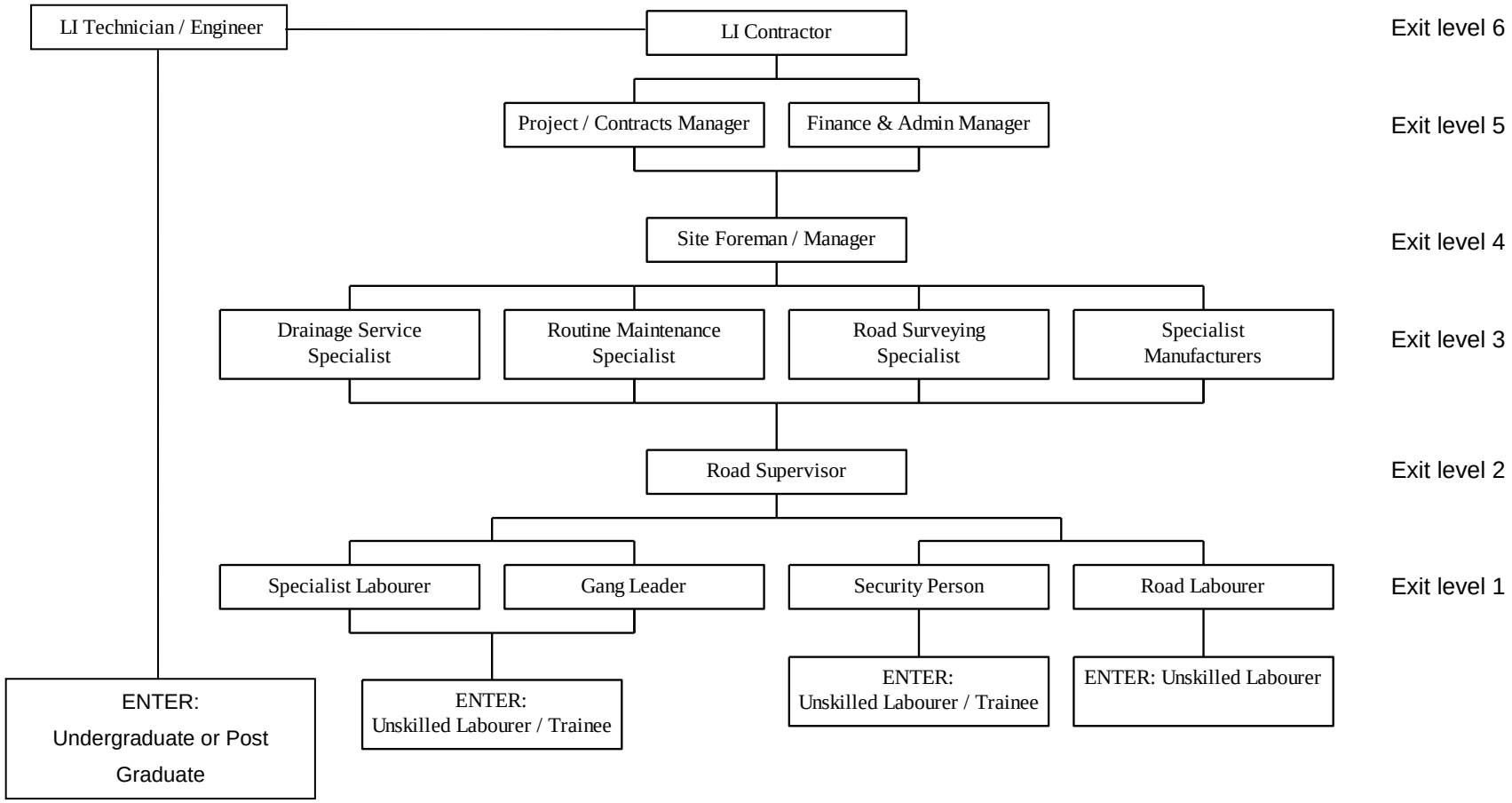

OUTCOME

5

5 OUTCOME 5: DEVELOP AND IMPLEMENT LIC ADMINISTRATIVE SYSTEMS

The purpose of this Outcome is to enable you to develop and implement LIC administrative systems

This Outcome will enable you to:

1. *Keep records in accordance with LIC project procedures and quality management systems*
2. *Implement personnel administration in accordance with LIC project requirements*
3. *Develop and apply reporting systems to projects in accordance with LIC procedures*

5.1 RECORDS ARE KEPT IN ACCORDANCE WITH LIC PROJECT PROCEDURES AND QUALITY MANAGEMENT SYSTEMS

Learning Activity Outcomes

This section of Assessment Criteria will enable you to:

Set up a system for keeping records in accordance with Labour-intensive construction site procedures and quality management systems

THE SUPERVISION OF ACTIVITIES ON A PROJECT IS ONLY AS GOOD AS THE RECORD KEEPING. THESE RECORDS NEED TO BE DONE ACCURATELY AND TIMEOUSLY BY COMPETENTLY TRAINED PEOPLE, SO THAT THE DATE IN THESE RECORDS CAN BE USED

5.1.1 RECORD KEEPING

Typical records required

The list below shows a range of records typically needed on a LIC site:

- Personnel records
- Attendance register
- Tasks record and wages paid
- Production measurements, productivities and progress
- Daily costing versus allowables
- Materials controls: procurement, issue, returns and waste
- Tools and equipment issue and returns
- Plant and equipment production and productivity
- Quality measurements and interpretation
- Action required for non-conformance to quality standards

An important point that must be made is that sufficient records must be kept to allow tight control to be applied to every aspect of site work. Records should not be kept for the sake of record-keeping. It is too easy to swamp a site administration with an unnecessarily high demand for records. If a record is not immediately useful it should not be kept.

1. Measurements and recording of Tasks

A record is kept of the **number of tasks** that are **completed in one pay cycle** and the person is paid for the tasks completed.

Meticulous records are needed for proper task payment of the labour. Use a self-checking system to record attendance, tasks allocated and tasks completed. As completed tasks are the basis of payment, accuracy is very important. Independent checks should be built into the system. Attendance records are needed and may be kept by the Team Leaders or by the Clerk. These are often used together with personnel records.

2. Production records

It is advisable to maintain accurate records of production so that productivity can be calculated for every activity. This helps planning and can form the basis of a productivity improvement process. Costing of production should be plotted together with the tender estimates to show the profitability (or otherwise) of every operation.

3. Productivity

Productivity calculation should be compared to the task rates used, as it forms a useful check. Productivity costing should be made and can be compared to tender rates used or can form the basis of new tender rates.

4. Materials usage

Materials used for every operation must be carefully recorded. This will quickly show where wastage is high or where quantities were wrongly calculated. When billed items are in error by a certain amount, it may afford the contractor an opportunity to renegotiate the rates paid for that item. Records of material use may also be a quality requirement for certain work (for example, how much bitumen was used over a certain length of road can be translated to an average spray rate).

5. Plant and equipment records

Records of hours worked for every item of plant and equipment is essential for calculation of machine availability, for the payment of hire charges, for calculation of fuel consumption and many more.

6. Quality records

The quality control requirements of the contract will also need records of materials, tests, survey checks and more to be kept. As these are contractual requirements, careful reading of the specifications will be essential before an adequate quality record system can be set up.

Quality non-compliance records and documentation on Quality Improvement will assist in ensuring future conformance to quality requirements (specifications).

5.1.2 TYPICAL LIC PROJECT RECORDS

1. Category A – Recruitment Stage

Form NR - Notice of recruitment: Letter requesting recruitment
Form CE1 - Contractual Agreement: Community based Project Supervisor
Form CE2 - Contractual agreement: Rural infrastructure (Trainee) Community Contractor
Form CE3 - Contractual agreement: Concrete Pipe Construction Contractor
Form CE4 - Confirmation of Supervisor/Trainee Supervisor Employment:
Form CE5 - Confirmation of Labourer Employment:
Form CE6 - Confirmation of duties and Security of Employment:

2. Category B - Construction Stage

Form B1 - Daily production record (Sports fields)
Form B2 - Daily report
Form B3 - Daily task production record (Roads)
Form B4 - Fortnightly report
Form B5 - Tool and material record

3. Category C - Registration

Form A1 - Daily register: Rural infrastructure Community Contractor
Form A2 - Daily register: Concrete Pipe Construction Contractor
Form A3 - Daily register: Supervisor/Trainee Supervisor
Form A4 - Daily register: Labourer

4. Category D – LIC Engineer and/or Technician

Form D1 - Site survey record
Form D2 - Task schedule
Form D3 - Material schedule
Form D4 - Progress chart
Form D5 - Construction programme
Form D6 - Road length measurement record
Form D7 - Bar chart
Form D8 - Project diary (site visits and inspections)
Form D9 - Purchase Order List
Form D10 - Payment Certificate
Form D11 - Record of payment certificates

Other:

- Contract document: Performance Baseline and other subsidiary plans; Method Specifications; Operational/ Work Sheets and Plans; Design, drawings and other specifications
- General information and administration, technical data, etc.
- Training course documentation (preparatory notes, timetable, course content such as the lecturers reference material and trainee handouts)

5.2 PERSONNEL ADMINISTRATION IS IMPLEMENTED IN ACCORDANCE WITH LIC PROJECT REQUIREMENT

Learning Activity Outcomes

This section of Assessment Criteria will enable you to:

Implement personnel administration in accordance with LIC site requirements

KEEPING RECORDS OF "CONTRACTS OF EMPLOYMENT" INCLUDING THE CONDITIONS OF EMPLOYMENT, GRIEVANCE AND DISCIPLINARY PROCEDURE, TRAINING UNDERGONE AND RESULTS OF TRAINING ASSESSMENTS, ALLOCATION OF TOOLS AND SAFETY EQUIPMENT, AND PERSONAL PROTECTIVE CLOTHING

5.2.1 PERSONNEL RECORDS

In managing employees, we need to understand the different needs of labour and of management, Employees' expectations are:

- Fair and reasonable treatment
- Individual recognition
- Some security
- Outlet for initiative
- Worthwhile work
- Opportunity for enhancement

The objectives of management are the following:

- Make a profit
- Make progress on the project
- Produce the product according to programme
- Maintain productivity standards
- Achieve quality standards
- Preserve safe working practices and conditions
- Follow prescribed methods/processes
- Maintain continuity of work and the business

In dealing with people, managers should understand and observe some basic ground rules:

- Recognise the individual's value system
- Set targets
- Keep people informed

- Provide consequences for work (ownership)
- Make the best use of worker's abilities
- Assist the workers to develop

Our administration systems and procedures should be geared to complying with the above criteria. We need to supervise and manage our employees by opening up clear communication paths for information in both directions, and by showing respect for each individual's input, value systems, and needs. Keep good records of all instructions, interactions, meetings and requests. Follow up and give feedback on matters concerning each individual or group.

Temporary employees on a project have a fixed period contract with special clauses that govern task-based payment and compliance to LIC procedures. Understand the legislation concerning the conditions of employment, codes of practice and safety.

1. Personnel administration

Keeping personnel records means that all the details of people must be entered into the register, they must be kept up to date and must be confidential and must be available when needed.

Typical details required in a personnel register are:

- Names (surname, given name, Christian name, etc)
- Gender
- Residential and postal addresses
- Marital status
- Names and contact details of next of kin (family)
- ID number
- Tax number (if relevant)
- Bank account details (if relevant)
- Details of schooling, skills and qualifications
- Personal details (for example disabilities)

This information enables payments to be made to the correct person (directly into his/her bank account) as it enables positive identification to be made. In case of an accident, the register can quickly find the names and contact details of nearest family.

Accident reports must be made and kept for at least three years. All matters with regard to safety must be meticulously filed and cross-referenced so as to be easily retrieved. Safety inspectors do occasionally visit construction sites and can demand to see the safety-related files.

Special records may be needed for targeted labour, particularly when the project specification contains clauses like:

“In addition the following criteria are suggested to help target the poorest of the poor:

1. People who come from households where the head of the household has less than a primary school education;
2. People who come from households that have less than one full time person earning an income;
3. People who come from households where subsistence agriculture is the source of income“

[Source: Code of Good Practice - Clause 6 sub-Clause 6.4]

5.3 REPORTING SYSTEMS ARE DEVELOPED, AND APPLIED TO PROJECTS IN ACCORDANCE WITH LIC PROCEDURES

5.3.1 WRITE AND SUBMIT REPORTS

Learning Activity Outcomes

This section of Assessment Criteria will enable you to:

Set up a system for the writing and submission of reports in accordance with LIC procedures

PROJECT DOCUMENTATION LISTS THE CONTRACTUAL REPORTING REQUIREMENTS

1. Reporting

In addition to the normal progress reports, supervisor's returns, updated and tracked bar charts, cost reports etc, there are likely to be special reporting requirements for a Labour-intensive contract. *(refer to the contract documentation).* Numbers of labourers employed on various operations, as well as the gender ratio, is a normal LIC requirement.

Details of skills training given to labourers are also often required. Sometimes clients ask for detailed personnel lists, showing how many local people have been employed in management, supervisory or inspection jobs on the contract. In addition, most client bodies demand details of "previously disadvantaged" sub-contractors: how many received training, how many passed, how many are presently employed on the contract and what are the values of the sub-contracts?

Occasionally clients want details of activities involving the community, like evening classes in adult basic education that are open to labourers and members of the community. It is essential that records of all these activities are meticulously kept so that reports can be written when needed.

5.3.2 CLOSING-OUT AND HANDING OVER THE PROJECT

The project close-out can be subdivided as follows:

- Compile historical data from each previous project to assist in the conceptual development of any future projects
- Utilise historical data from previous projects to predict the trends and problem areas that could be or are being encouraged on a current project
- Compile a close-out report that evaluates the performance of a current project against the original project objectives
- Make recommendations for future projects

1. Historical Data Collection

Learning from previous projects' experiences, problems and solutions to problems is the most basic form of personal, professional and organisational development. An inability to learn from past project, or related, mistakes could be costly and time-consuming. Hence, the necessity of searching for historical data from previous projects is beneficial, and the reason for compiling (and filing accessibly) close-out reports can be appreciated.

No two projects will be similar, in full or even in part, so allowances must be made for these limitations. What one should look for is the wealth of similarities that can contribute to and provide insight into future issues that may arise in a current project. Look at what went well, what problems were experienced, what could be avoided or needed special attention, how can potential recurring problems or mistakes be avoided or prevented, what were the recommendations or suggestions provided, inter alia.

2. Project Close-out Report

This report is compiled during the final phase of a project before the project participants have dispersed. For best results, a structured report format is recommended using the following steps:

Step 1 - Generate a comprehensive "questionnaire" and circulate it to all relevant project participants, e.g. Client, Project Team, Company participants, Suppliers, Contractor and sub-Contractors, etc

Step 2 - Analyse the responses and meet with key persons to discuss

Step 3 - Compile a draft close-out report for commentary and inputs

Step 4 - Hold a formal close-out meeting attended by all the relevant participants

Step 5 - Compile the final close-out report, disseminate it to relevant parties, and file it for easy access

The main benefit of a questionnaire is to gather and structure all the responses from each project participant (a broad range of inputs, commentaries and opinions). The purpose of the questionnaire is to quantify what happened on the project in question, in an objective and constructive manner. The questionnaire can be structured to include some of the following statements and/or questions:

- Identify one's position in the organisation flowchart (OBS). Comment on the interfacing and co-operation with others as contained in the OBS
- Briefly outline your assigned scope of work
- Comment on the delegation of your responsibility and authority

- Comment on planning schedules, CPM, budgets, quality, estimations, productivity, resource performances – use statistical data in support
- Give an honest assessment of one's own personal and professional performance with respect to your assigned scope of work
- Comment on the lines of communication, the issuing of instructions, the holding of meetings, the accessibility and availability of timeous info, procedures and reporting
- Evaluate the design, the planning operation, technical issues, social issues, drawing, specifications, training manuals, inter alia
- Comment on any scope changes & concessions. Evaluate how smoothly the configuration system worked. Were changes approved & implemented timeously?
- Discuss the choice of technology/ies used
- Discuss any intangible/unforeseen/unexpected problems that arose, how they affected the project, and what solutions were put into effect
- Comment on the procurement of materials, tools, equipment, machinery supplies, and the respective supplies
- Comment on the performance of the local or other sub-Contractors
- Comment on the performance and training of labour, as well as any union-related issues
- Evaluate the accuracy of all the planning estimations, and list any recommendations or changes for future projects
- Evaluate the contract document
- General recommendations or suggestions for future projects

3. Recommendations for Future Projects

Learning is one of the most important features of any project. These recommendations can provide an invaluable source of direction for future projects. The close-out report must highlight any recommendations in a simple and clearly understandable manner so that use can be made of these in the future.

The project estimations like time, cost, resources, etc. should be carefully reviewed and commented on. This helps in the preparation of competitive profitable estimations for tenders on future projects.

The final statement of the close-out report should comment on the overall success of the project and whether it would be wise for the company to tender on projects like these in future.

4. Project Handover

This indicates the end of the project to the client. The key information or documents include:

- Commissioning report – to demonstrate that the end product has reached the required specification
- Handover of data books/ operator instructions/ user manuals – how the product was made/ built/ manufactured
- Financial close-out report – once this is issued no further payments will be accepted except for "retention"
- Letter of Acceptance or Final Site Inspection Certificate – confirming that all contractual requirements have been fulfilled (including any snag list items); and adherence to the maintenance record of the contract
- Formal community gathering on-site to commemorate the completion and officially hand the project over to the community

5.3.3 NARRATIVE REPORT ON AN EPWP PROJECT SITE VISIT

Date of this site visit:	
1. PROJECT DETAILS:	
1.1 Name of public body	
1.2 Name of District Municipality	
1.3 Name of Local Municipality	
1.4 Project name	
1.5 Project number	
2. GENERAL COMMENTS	
2.1 What is the labour intensity on site and how can it be improved?	
2.2 What kind of branding is present on site and how can it be improved?	
2.3 If the task rate is higher than in the contract document, what is the reason for it?	
2.4 What training was done (off site and on site)? For how many people and when was it done?	
2.5 What are the different task sizes?	
3. What key actions can be taken to improve on the concerns raised?	

***Please attach photos of this project to the report. Also upload on the MIS where possible.**

ADDENDUM 1: EPWP BIGGER PICTURE

ADDENDUM 2: GUIDELINES FOR THE IMPLEMENTATION OF LABOUR-INTENSIVE INFRASTRUCTURE PROJECTS UNDER THE EXPANDED PUBLIC WORKS PROGRAMME (EPWP)

ADDENDUM 3: MINISTERIAL DETERMINATION: SPECIAL PUBLIC WORKS PROGRAMMES

ADDENDUM 4: CODE OF GOOD PRACTICE FOR EMPLOYMENT AND CONDITIONS OF WORK FOR SPECIAL PUBLIC WORKS PROGRAMMES

ADDENDUM 5: SANS 1921 PART 5 (SOUTH AFRICAN NATIONAL STANDARDS)