Pavement types and behaviour

Design Objectives

Scope

- Elements of concrete pavements
- Concrete pavement types
- Behaviour of pavements
- Principle requirements
- Design and construction objectives

CEMENT & CONCRETE SA

CEMENT & CONCRETE SA

CEMENT & CONCRETE SA

CEMENT & CONCRETE SA

CEMENT & CONCRETE SA

Pavement Elements

Terminology

- Concrete Pavement
- Asphalt Pavement

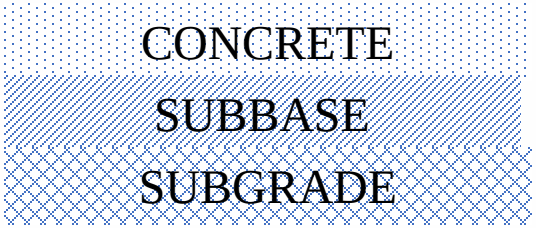

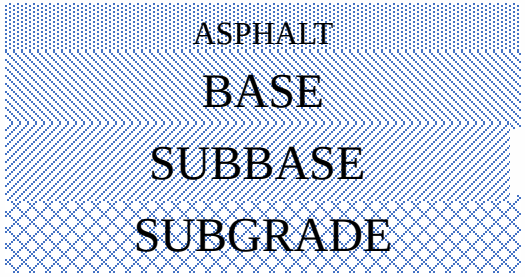

CEMENT & CONCRETE SA

Stresses

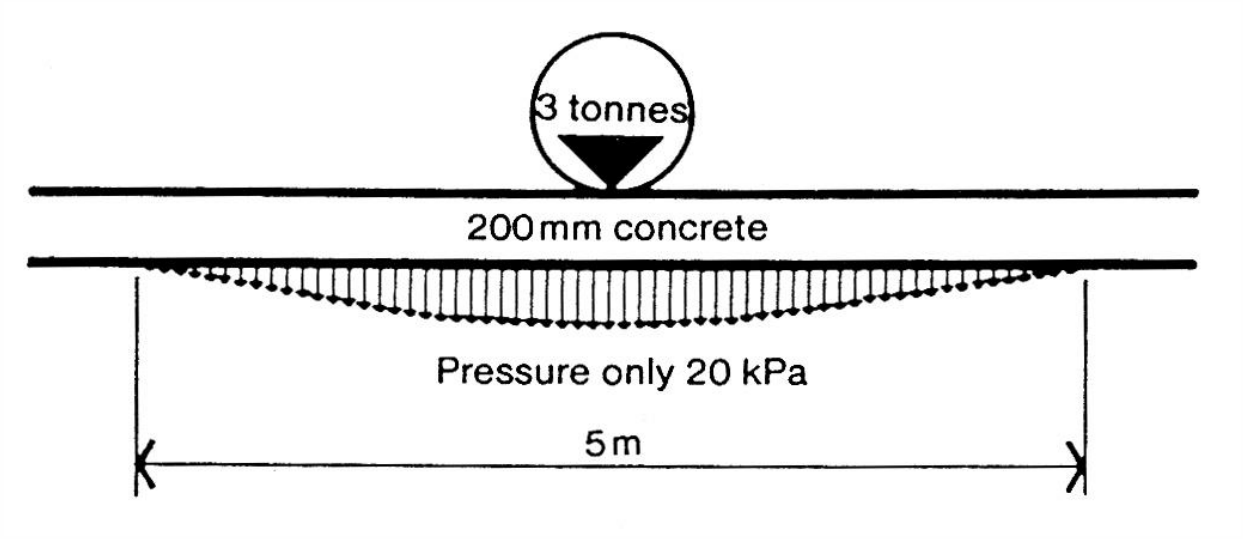

Pavement Depth

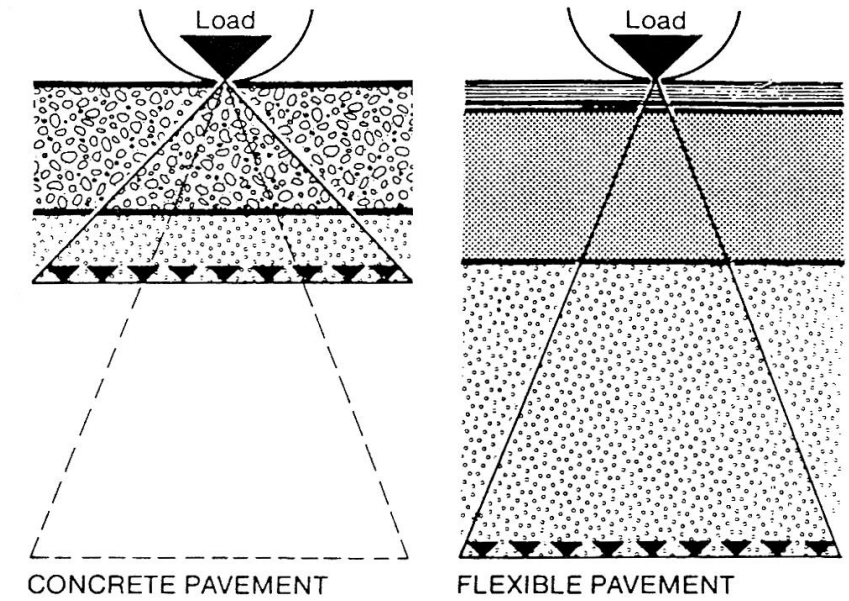

Pavement Depth

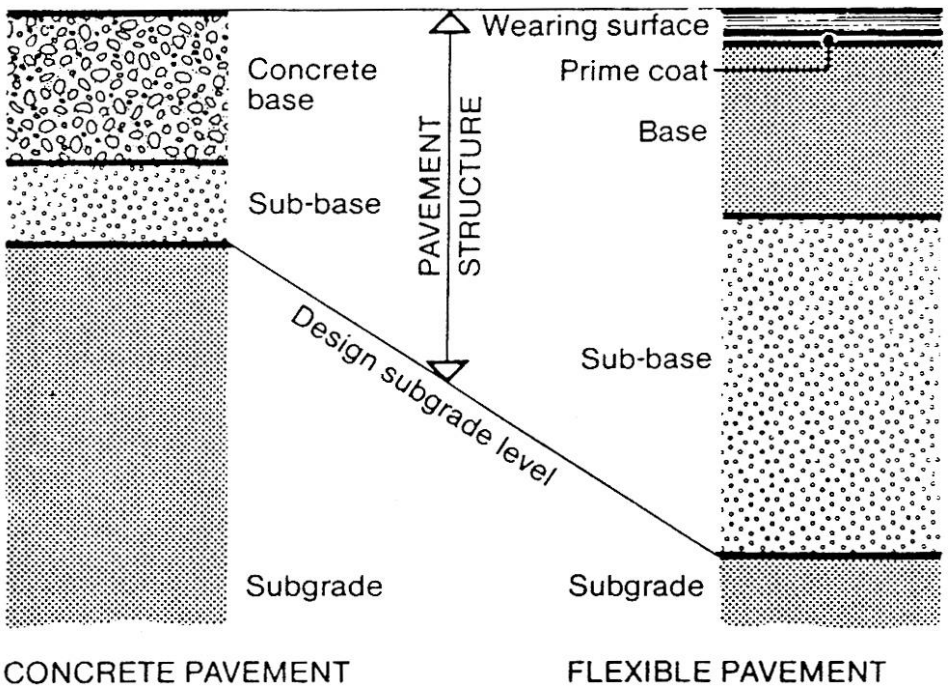

Pavement Types

Jointed Unreinforced (Plain)

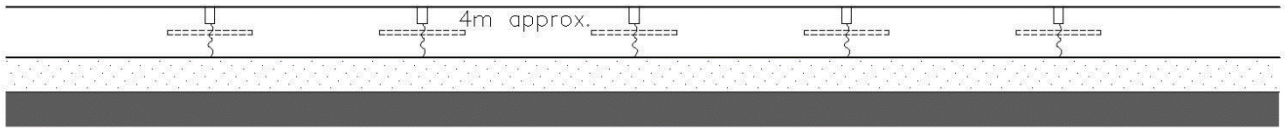

a. Jointed unreinforced (plain) concrete pavement with or without dowels

Jointed Unreinforced (Plain)

- Short joint spacing <4,5m
- Little or no reinforcement
- Dowels in heavily trafficked roads or specific locations
- Simplest construction
- Most SA freeways, N1, N3, N2 etc

CEMENT & CONCRETE SA

CEMENT & CONCRETE SA

Jointed Reinforced

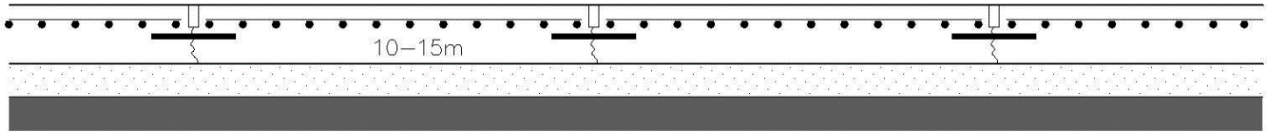

b. Jointed reinforced concrete pavement

Jointed Reinforced

- Longer joint spacing 10 to 15m
- Reinforcement increases with slab length
- Joint movement bigger
- Wider joints and dowels
- Not good experience overseas
- None in SA
- Same thickness as plain

CEMENT & CONCRETE SA

Continuously Reinforced

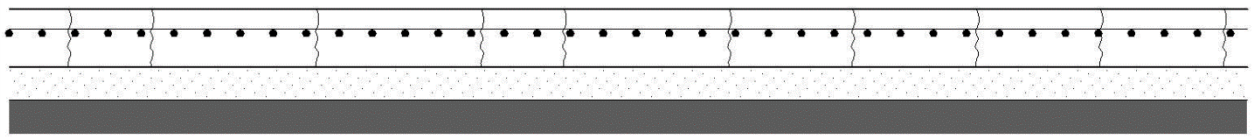

c. Continuously reinforced concrete pavement

Continuously Reinforced

- Reinforcement 0,5 to 0,7%
- Cracks 1 to 3m
- End movements
- No transverse joints
- Easily overlaid
- Use in SA - Overlays N1, ES , Inlays N3, N2, M7
- Reduced thickness?

CEMENT & CONCRETE SA

CEMENT & CONCRETE SA

Prestressed

d. Prestressed concrete pavement

Prestressed

- Stressed longitudinally, diagonally, transversely
- Up to 300m
- Good subbases for deflections
- High cost
- Reduced thickness

CEMENT & CONCRETE SA

Fibre Reinforced

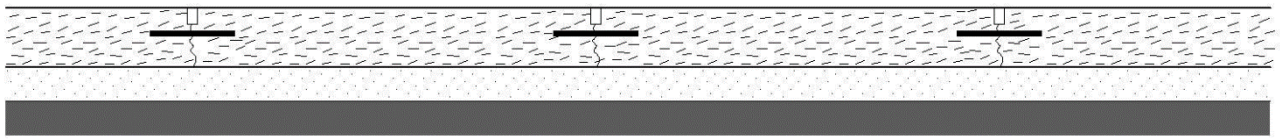

e. Fibre reinforced concrete pavement with or without dowels

Fibre Reinforced

- Big increase in flexural strength
- Increased cost
- Thickness reduction

CEMENT & CONCRETE SA

UTRCP

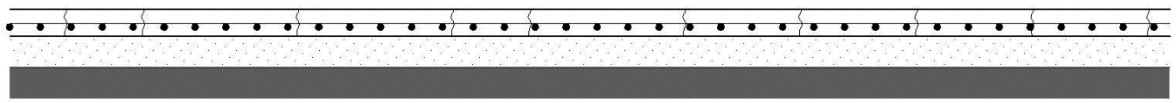

g. Ultra thin reinforced concrete pavement

UTCRCP

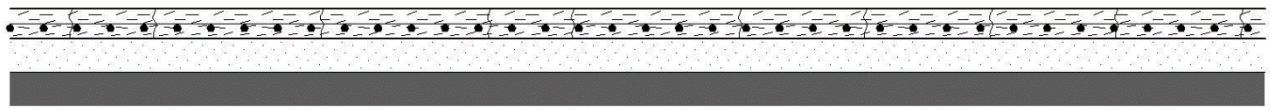

f. Ultra thin continuously reinforced concrete pavement

Pavement Behaviour

Behaviour under external load

- Concrete fails in tension
- Control stresses at bottom (top????)
- Flexural stress >50% repeated -fatigue
- Erosion under pavement

CEMENT & CONCRETE SA

Behaviour under internal stress

- Drying shrinkage and temperature changes cause contraction
- Contraction and friction create tensile stress
- When stress exceeds strength - cracks

CEMENT & CONCRETE SA

Behaviour under internal stress

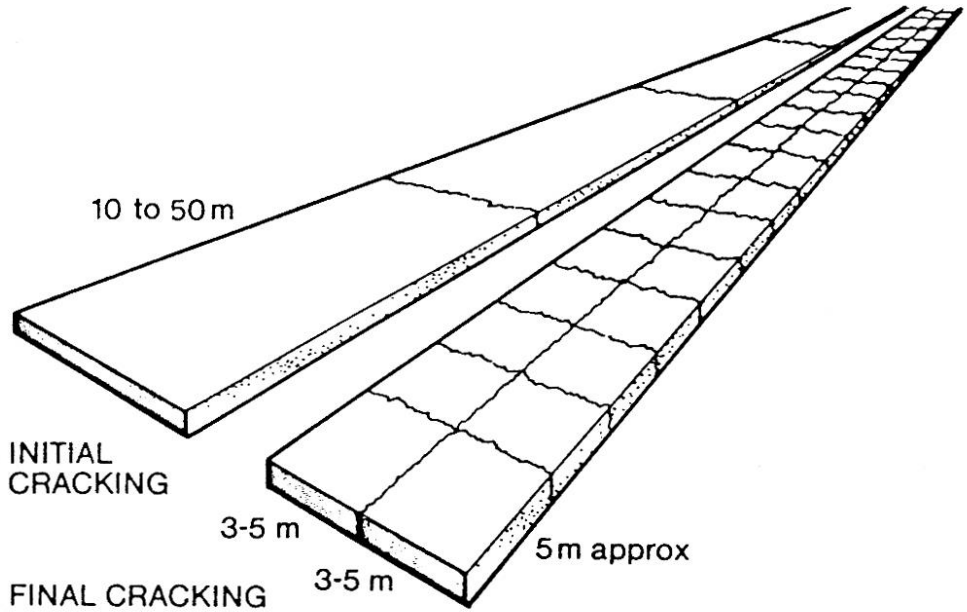

Behaviour under internal stress

- Drying shrinkage and temperature changes cause contraction
- Contraction and friction create tensile stress
- When stress exceeds strength - cracks
- Temp and moisture gradients - curling

CEMENT & CONCRETE SA

Behaviour under internal stress

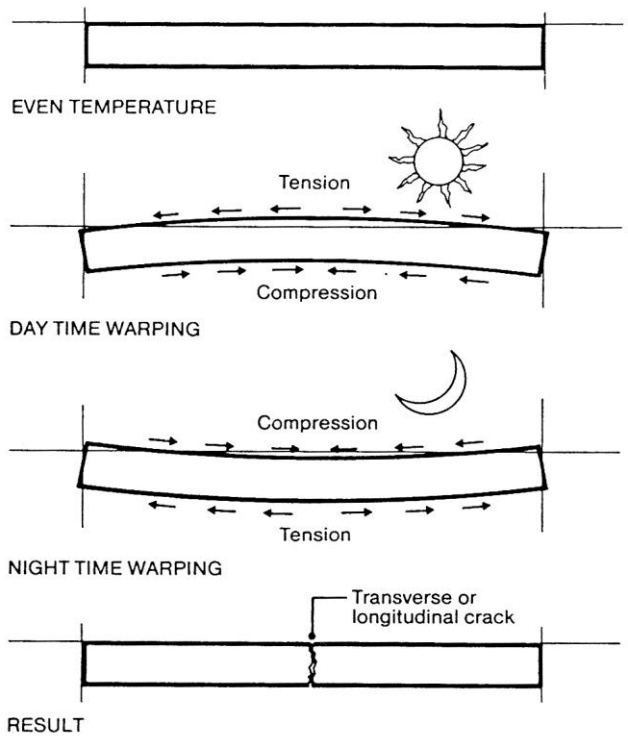

Behaviour under internal stress

- Drying shrinkage and temperature changes cause contraction
- Contraction and friction create tensile stress
- When stress exceeds strength - cracks
- Temp and moisture gradients - curling
- Behaviour determines joint and steel design

CEMENT & CONCRETE SA

Behaviour under internal stress

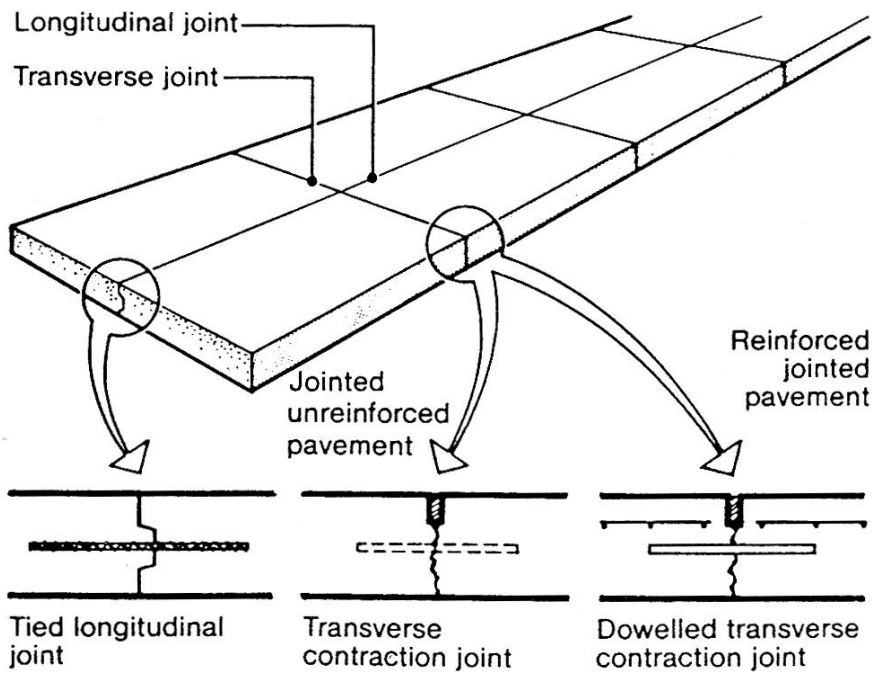

Natural Crack Development

- Volume loss
- Thermal Contraction

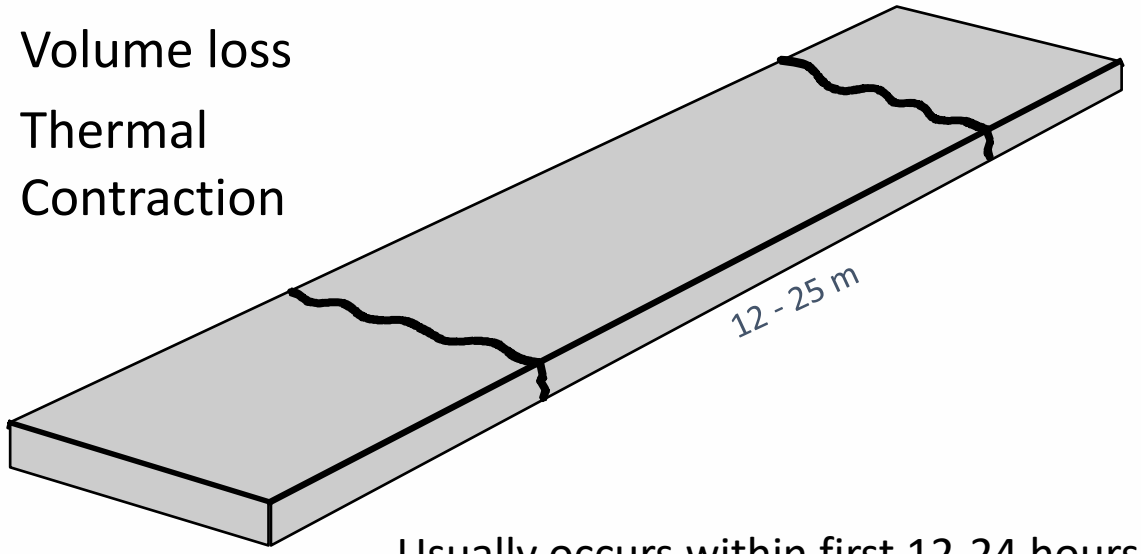

Usually occurs within first 12-24 hours

Natural Crack Development

- Temperature Gradients
- Moisture Gradients
- Thermal Cycles
- Loading

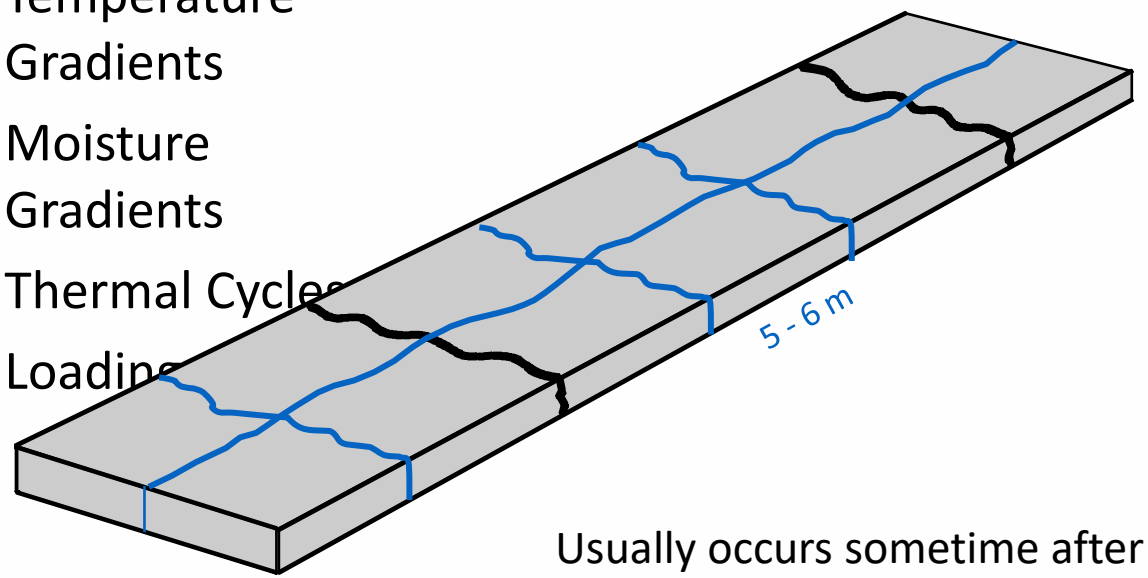

Usually occurs sometime after 12 hours and may take months

CEMENT & CONCRETE SA

Natural Crack Development

- Proper jointing provides a series of saw cuts (joints) spaced to control crack formation

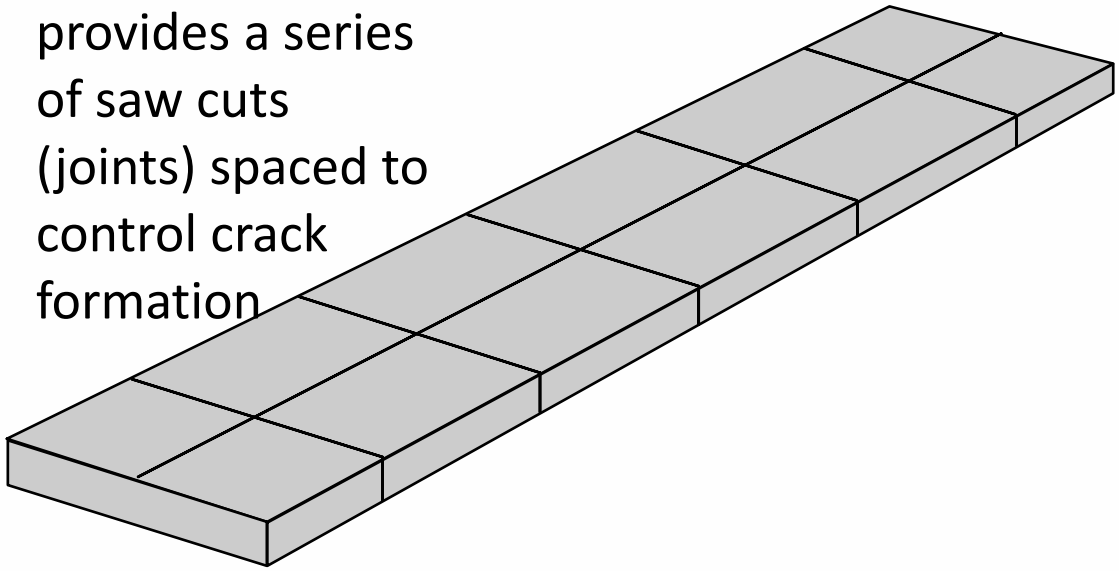

CEMENT & CONCRETE SA

Crack Formation

Thermal and Shrinkage Contraction

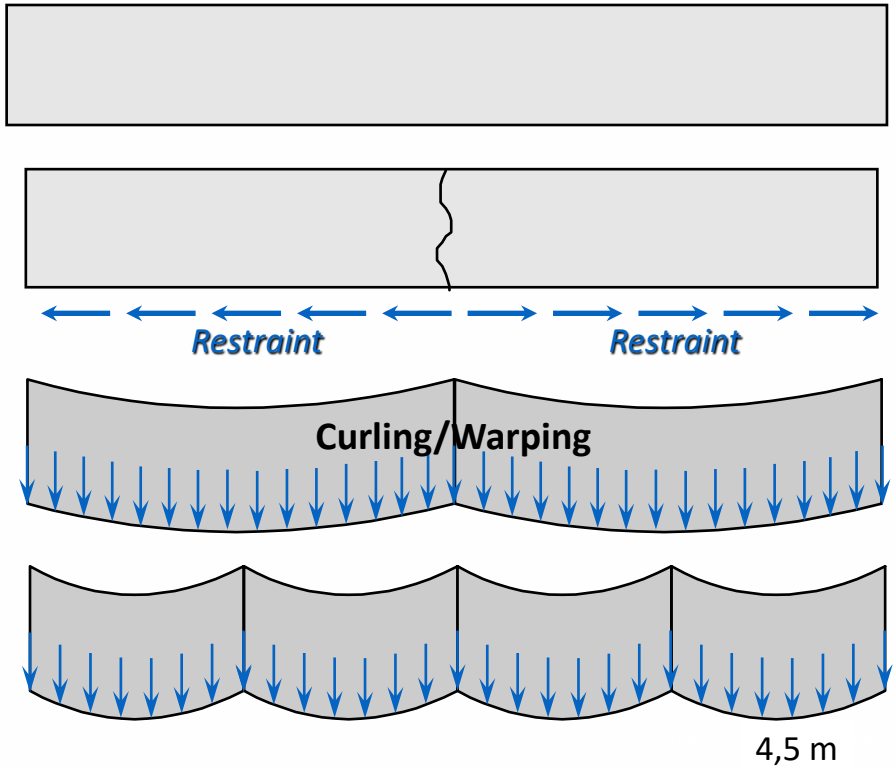

Principle Requirements

Principle Requirements

- Serviceability
- Durability
- Safety
  - Skid resistance
  - Visibility

CEMENT & CONCRETE SA

Design and Construction Objectives

Objectives

- Concrete quality
- Subgrade and subbase design
- Thickness design
- Joint design
- Construction

CEMENT & CONCRETE SA