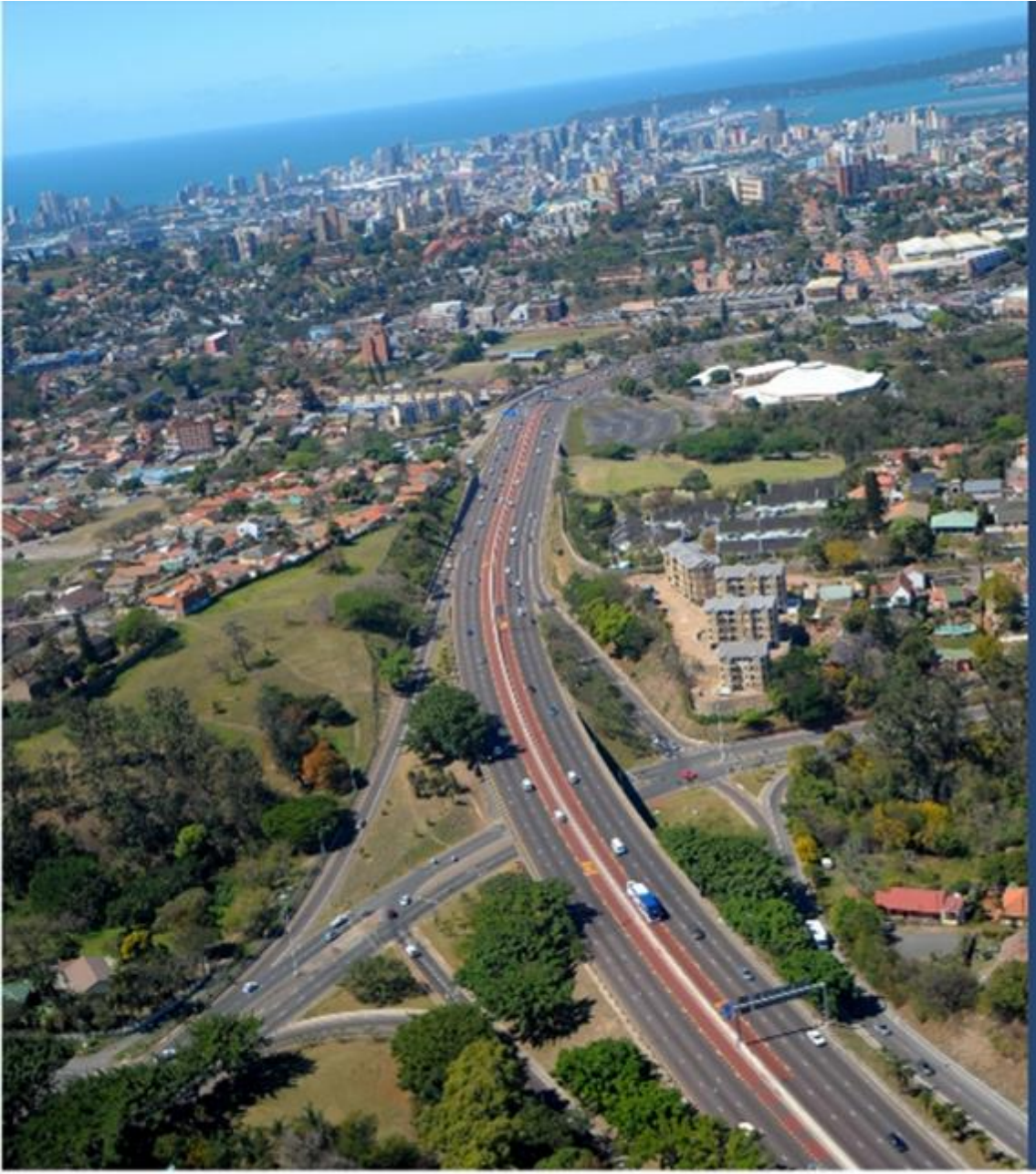

SARF

better roads

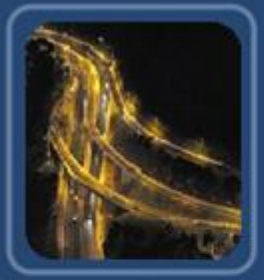

South African Road Federation

Concrete Pavements

Bryan Perrie

Cement & Concrete – SA

Bryan.Perrie@cemcon-sa.org.za

083 309 4260 / 011 315 0300

Introduction to Cement & Concrete SA

Introduction to Cement & Concrete SA

Result of consolidation of three bodies, namely:

- The Concrete Institute
- Concrete Society of Southern Africa
- Association of Cementitious Materials Producers

CEMENT & CONCRETE SA

Cement & Concrete SA

Building a future together

Partner Members

CEMENT & CONCRETE SA

AfriSam
Creating Concrete Possibilities

LAFARGE

PPC STRENGTH GUARANTEED
PPC

Powered By
Sephaku CEMENT
DANGOTE CEMENT

Membership Options

A variety of membership options with many benefits

- Access to Online Information Centre
- Access to Advisory Desk
- Discounts on SCT courses
- Discounts on technical publications
- Discounted consulting services
- Listing in the CCSA Directory
- Hyperlinked logo in Concrete Beton and on website

Contact Natasja at natasja.pols@cemcon-sa.org.za for more information

MEMBERSHIP CATEGORY OVERVIEW

	Individual		Corporate						
	Individual	Retired	Academic	Emerging Contractors	Associate	Bronze	Silver	Gold	Platinum
Member Annual Subscription (Prices exclude VAT)	R700	R500	Free	R3,000	Free	R10,000	R25,000	R125,000	R1,000,000 Fee
Number of Individual Members	1	1	15	3	2	10	15	30	40
Monthly Newsletter									
Access to Advisory Desk and Online Information Centre									
Discount on educational courses	10%	10%	10%	10%		10%	10%	10%	10%
Discounted access to CCSA events	5%	5%	5%	5%		5%	5%	10%	5 Free + discount
Discount on Books & Technical Publications	5%	5%	5%	5%		5%	5%	5%	10%
Discounted Consulting Services									
Magazines									
Individual listing in CCSA Directory									
Company listing in CCSA Directory									
Company logo & link in Magazines									
Company logo & link on CCSA website									
Discounted Advertorials (magazines/newsletters)				1 issue/yr	1 issue/yr	1 issue/yr	2 issues/yr	3 issues/yr	FREE – all issues
Mention/ acknowledgements at CCSA events							Digital	Digital & Special Mention	Digital & Special Mention
Company Banner displayed at CCSA events								Digital	Physical & Digital
Rights for Sponsorships at CCSA events								3rd rights	2nd rights

T +27 11 315 0300 E info@cemcon-sa.org.za www.cemcon-sa.org.za
PO Box 168, Halfway House, 1685, South Africa
Block D, Lone Creek, Waterfall Park, Bekker Road, Midrand, 1682
Registered Number 2012/047311/08 | VAT Number 4250263888

School of Concrete Technology

CCSA's

School of Concrete Technology's

online education programme!

Please contact the SCT to discuss the best concrete technology education path for you:

sct@cemcon-sa.org.za

YCRETS 2021 (13 - 14 July 2021)

The Young Concrete Researchers, Engineers and Technologists Symposium (YCRETS) aims to create a platform to bring together young individuals who work on the development, design and application of concrete and cementitious based materials, in Southern Africa.

*Contact Janina at **janina.kanjee@wits.ac.za** for more information or visit the following link: **cemcon-sa.za/events/ycrets/***

*More posts will also follow on Twitter **@YCRETS***

Communications

http://www.cemcon-sa.org.za

linkedin.com/company/cement-and-and-concrete-sa/mycompany/

Concrete Beton

CONCRETEBETON is available exclusively on-line, read the March 2021 issue at:

www.cemcon-sa.org.za

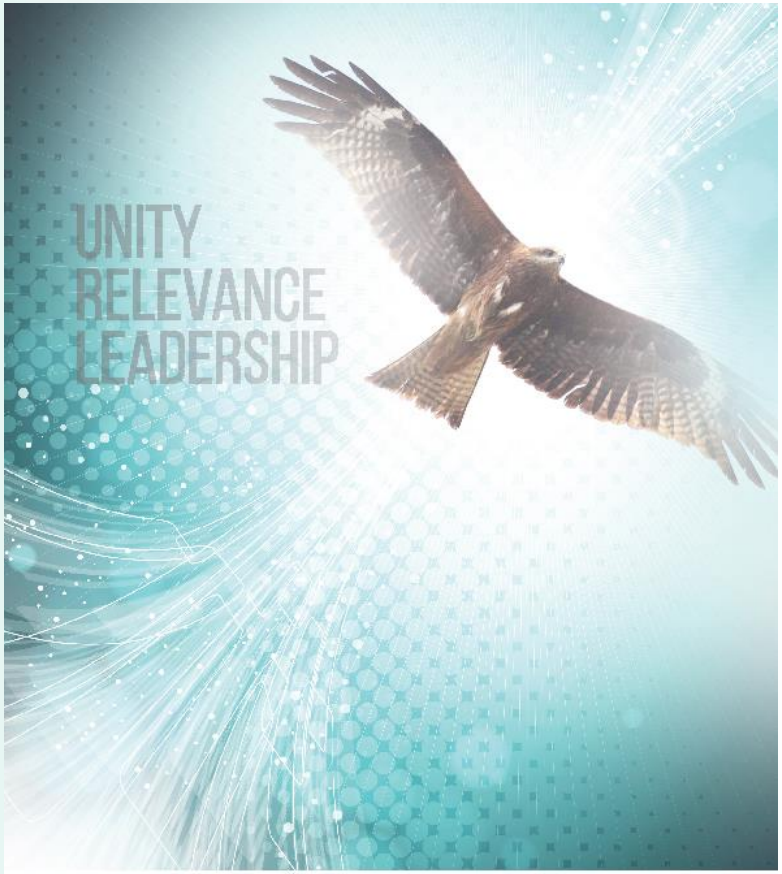

The consolidated cement and concrete industry body is soaring to new heights

Become a member – be part of the future

www.cemcon-sa.org.za

COTO

Why this course?

1. COLTO has been withdrawn and COTO now legal document
2. Everything has changed and is different
3. Concrete pavements and cbp in same chapter
4. New chapter on Maintenance and Repair
5. Course will not be a verbatim repeat of COTO
6. Won't necessarily compare COLTO/COTO
7. Emphasize important changes
8. Assist attendees in understanding the changes

Structure of the course

Day 1

- Understand the new structure of the COTO document
- Understand the new structure of each chapter
- Deal primarily with the various issues in Chapter 6: Concrete Layers

Day 2

- Deal primarily with the issues in new chapter, Chapter 7: Maintenance and Repair of Concrete Layers

Background

- Pre 1980 – own specifications
- 1980's – SABS 1200, TRHs and TMHs
- 1987 – CSRA "Committee of State Road Authorities"
- 1998 – COLTO "Committee of Land Transport Officials"
- 2020 – COTO "Committee of Transport Officials" **October 2020** version – full legal standing – COLTO withdrawn
- 2022/2023 – COTO Final Standard

Background

- Draft Chapters can be downloaded from either SANRAL or DOT websites

- Comments on the draft chapters should be submitted on Excel spreadsheet available on above websites

- Submit to cotorevision@nra.co.za

COLTO Content

Series (8)	Sections (55)
1000 General	7
2000 Drainage	4
3000 Earthworks and Pavement Layers of Gravel or Crushed Stone	9
4000 Asphalt Pavements and Seals	9
5000 Ancillary Roadworks	9
6000 Structures	8
7000 Sundry Structures	5
8000 Sundries	4

400 pages

COTO Content

Chapters (15)	Sections (90)
1. General	7
2. Services	4
3. Drainage	3
4. Earthworks and Pavement layers: Materials	5
5. Earthworks and Pavement layers: Construction	5
6. Concrete Layers	2
7. Maintenance and Repair of Concrete Layers	6
8. Pre-treatment and Repair Existing Layers	9
9. Asphalt Layers	1
10. Surface Treatments	1
11. Ancillary Works	9
12. Geotechnical Applications	12
13. Structures	14
14. Repair and Rehabilitation of Structures	11
20. Quality Assurance	1

1200 pages

COTO Structure

- Each Chapter has a number of Sections
- Each Section has 4 parts viz;
  - Part A: Specifications
  - Part B: Labour Enhancement
  - Part C: Measurement and Payment
  - Part D: Guarantees and Compliance Certificates

Part B – Specs to improve the scope for labour, not labour-intensive construction. Part A specs apply unless changed in Part B

Aggregates

- COTO refers to “latest version” of SANS 1083
- SANS 1083 currently being revised to cover “Aggregates for Construction”
- Will have 6 parts covering aggregates for:
  - Concrete
  - Mortar
  - Gabions and Ballast
  - Asphalt
  - Surfacings
  - Granular layers G1 to G10
- Will cover natural, non-natural (e.g. slags) and recycled aggregates

Concrete Test Methods

- Concrete test methods are being revised into SANS 3001 series as follows:
  - CO1 Tests on fresh concrete
  - CO2 Tests on hardened concrete
  - CO3 Tests on concrete structures
- COTO refers to the new numbers
- All published and unpublished standards are listed in Chapter 20

OLD	CURRENT/PROPOSED	TITLE
Tests carried out on fresh concrete		
SANS 5861-1	**SANS 3001 CO1-1**	**Civil Engineering test methods Part CO1-1: Mixing fresh concrete in the laboratory**
SANS 5861-2	**SANS 3001 CO1-2**	**Civil Engineering test methods Part CO1-2: Testing fresh concrete — Sampling**
SANS 5862-1	**SANS 3001 CO1-3**	**Civil Engineering test methods Part CO1-3: Consistence of freshly mixed concrete — Slump test**
SANS 5862-3	**SANS 3001 CO1-4**	**Civil Engineering test methods Part CO1-4: Consistence of freshly mixed concrete — Vebe test**
SANS 5862-4	**SANS 3001 CO1-5**	**Civil Engineering test methods Part CO1-5: Degree of compatibility**
SANS 5862-2	**SANS 3001 CO1-6**	**Civil Engineering test methods Part CO1-6: Consistence of freshly mixed concrete — Flow table test**
SANS 6250	**SANS 3001 CO1-7**	**Civil Engineering test methods Part CO1-7: Density of compacted freshly mixed concrete**
SANS 6252	**SANS 3001 CO1-8**	**Civil Engineering test methods Part CO1-8: Air content of freshly mixed concrete — Pressure method**
	SANS 3001-CO1-9	**Civil Engineering test methods Part CO1-9: Self-compacting concrete — Slump-flow test**
	SANS 3001-CO1-10	**Civil Engineering test methods Part CO1-10: Self-compacting concrete — V-funnel test**
	SANS 3001-CO1-11	**Civil Engineering test methods Part CO1-11: Self compacting concrete — L box test**
	SANS 3001-CO1-12	**Civil Engineering test methods Part CO1-12: Self-compacting concrete — Sieve segregation test**
	SANS 3001-CO1-13	**Civil Engineering test methods Part CO1-13: Self-compacting concrete — J-ring**

OLD	CURRENT/PROPOSED	TITLE
Tests carried out on hardened concrete		
SANS 5860	**SANS 3001 CO2-1**	**Civil Engineering test methods Part CO2-1: Dimensions, tolerances and uses of cast test specimens**
SANS 5861-3	**SANS 3001 CO2-2**	**Civil Engineering test methods Part CO2-2: Making and curing specimens for hardened concrete tests**
SANS 5863	**SANS 3001 CO2-3**	**Civil Engineering test methods Part CO2-3: Compressive strength of hardened concrete**
EN 12390-4.	**SANS 3001-CO2-4**	**Civil Engineering test methods Part CO2-4: Compressive strength - Specification for testing machines**
SANS 5864	**SANS 3001 CO2-5**	**Civil Engineering test methods Part CO2-5: Flexural strength of hardened concrete**
SANS 6253	**SANS 3001 CO2-6**	**Civil Engineering test methods Part CO2-6: Tensile splitting strength of concrete**
SANS 6085	**SANS 3001 CO2-7**	**Civil Engineering test methods Part CO2-7: Initial drying shrinkage and wetting expansion of concrete**
SANS 6251	**SANS 3001 CO2-8**	**Civil Engineering test methods Part CO2-8: Density of hardened concrete**
SANS 6255	**SANS 3001 CO2-9**	**Civil Engineering test methods Part CO2-9: Mortar tests – Compressive strength of mortar**
SANS 6254	**SANS 3001 CO2-10**	**Civil Engineering test methods Part CO2-10: Mortar tests – Initial drying shrinkage and wetting expansion of mortar**

OLD	CURRENT/PROPOSED	TITLE
Tests carried out on concrete structures		
SANS 3001-CO3-1: 2015	SANS 3001-CO3-1:2015	Civil Engineering test methods Part CO3-1: Concrete durability index testing — Preparation of test specimens
SANS 3001-CO3-2: 2015	SANS 3001-CO3-2:2015	Civil Engineering test methods Part CO3-2: Concrete durability index testing — Oxygen permeability test
SANS 3001-CO3-3: 2015	SANS 3001-CO3-3:2015	Civil Engineering test methods Part CO3-3: Concrete durability index testing — Chloride conductivity test
SANS 5865	**SANS 3001 CO3-5**	**Civil Engineering test methods Part CO3-5: The drilling, preparation and testing for compressive strength of cores**

Questions?

Chapter 6
Concrete Layers

Chapter 6

- Chapter 6 has two Sections viz;
  - 6.1 Paver Laid Concrete Layers
  - 6.2 Segmental Block Paving Layers

  - Each with the 4 Parts
    - Part A: Specifications
    - Part B: Labour Enhancement
    - Part C: Measurement and Payment
    - Part D: Guarantees and Compliance Certificates

Chapter 6

- Section 6.1 Paver Laid Concrete Layers
- Part A Specifications
  - A6.1.1 Scope
  - A6.1.2 Definitions
  - A6.1.3 General
  - A6.1.4 Design by Contractor/Performance Based Systems
  - A6.1.5 Materials
  - A6.1.6 Construction Equipment
  - A6.1.7 Execution of the Works
  - A6.1.8 Workmanship

Section 6.1 Part A Specifications

A6.1.1 SCOPE

- This Section covers all the material requirements and work pertaining to the construction of mechanically paver laid concrete layers on new supporting layers or existing concrete or asphalt layers and include, inter-alia, the following pavement types:
- - Jointed concrete pavement (JCP- Plain) – with or without dowels, for new construction or overlays
- - Continuously reinforced concrete (CRCP) for new construction or overlays
- The construction of concrete pavements utilising labour based methods or relatively small or isolated sections of concrete pavement are covered in Part B of this Chapter.

Jointed Unreinforced (Plain)

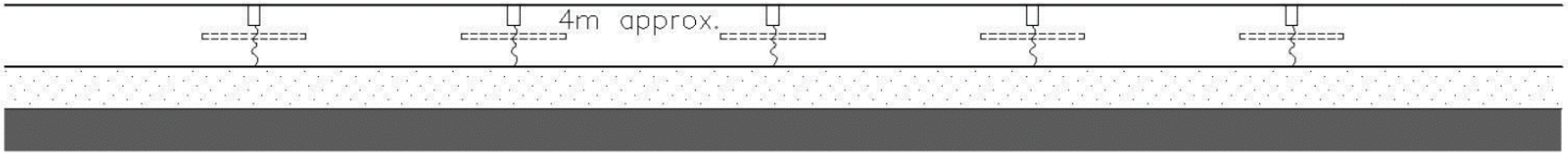

a. Jointed unreinforced (plain) concrete pavement with or without dowels

Jointed Unreinforced (Plain)

- Short joint spacing <4,5m
- Little or no reinforcement
- Dowels in heavily trafficked roads or specific locations
- Simplest construction
- Most SA freeways, N1, N3, N2 etc

Continuously Reinforced

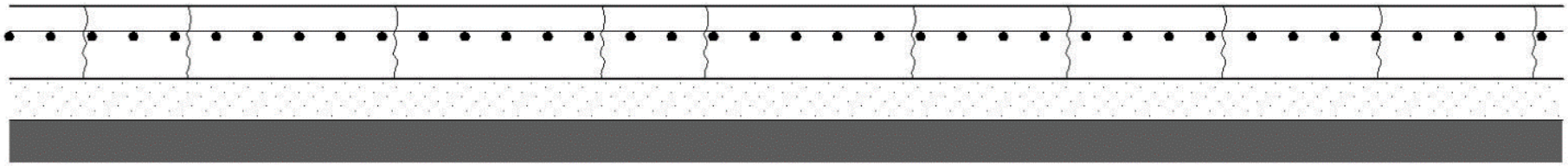

c. Continuously reinforced concrete pavement

Continuously Reinforced

- Reinforcement 0,5 to 0,7%
- Cracks 1 to 3m
- End movements
- No transverse joints
- Easily overlaid
- Use in SA - Overlays N1, ES , Inlays N3, N2, M7
- Reduced thickness?

UTCRCP

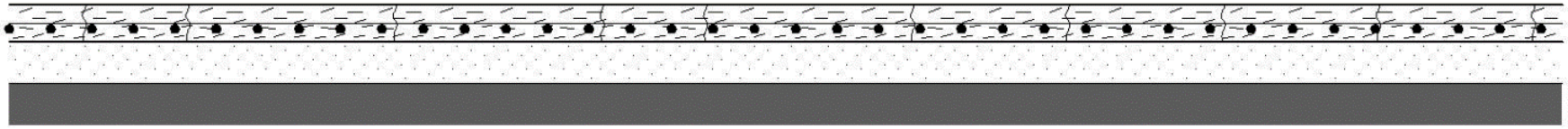

f. Ultra thin continuously reinforced concrete pavement

Pavement Behaviour

Behaviour under external load

- Concrete fails in tension
- Control stresses at bottom (top????)
- Flexural stress >50% repeated -fatigue
- Erosion under pavement

Behaviour under internal stress

- Drying shrinkage and temperature changes cause contraction
- Contraction and friction create tensile stress
- When stress exceeds strength - cracks

Behaviour under internal stress

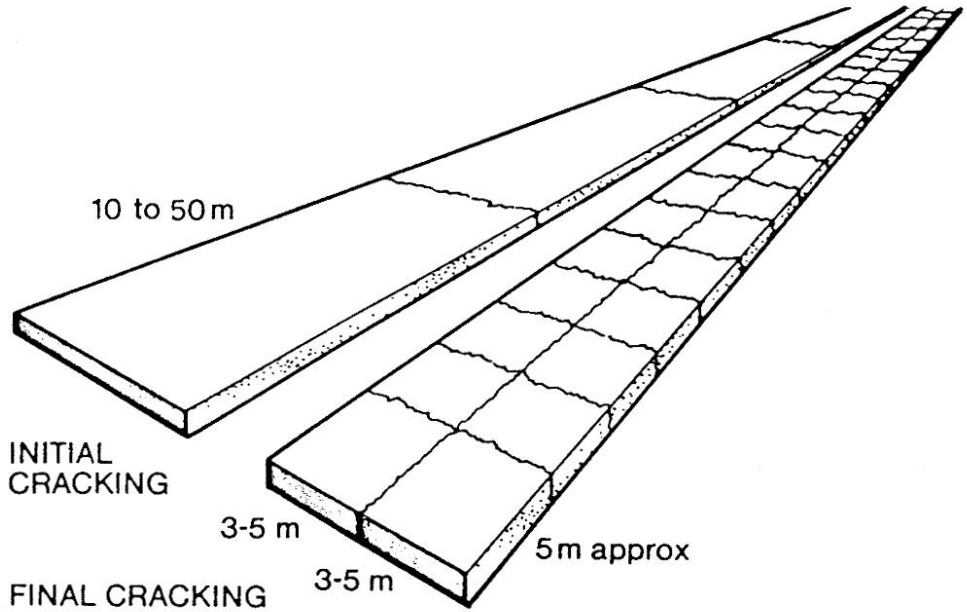

Behaviour under internal stress

- Drying shrinkage and temperature changes cause contraction
- Contraction and friction create tensile stress
- When stress exceeds strength - cracks
- Temp and moisture gradients - curling

Behaviour under internal stress

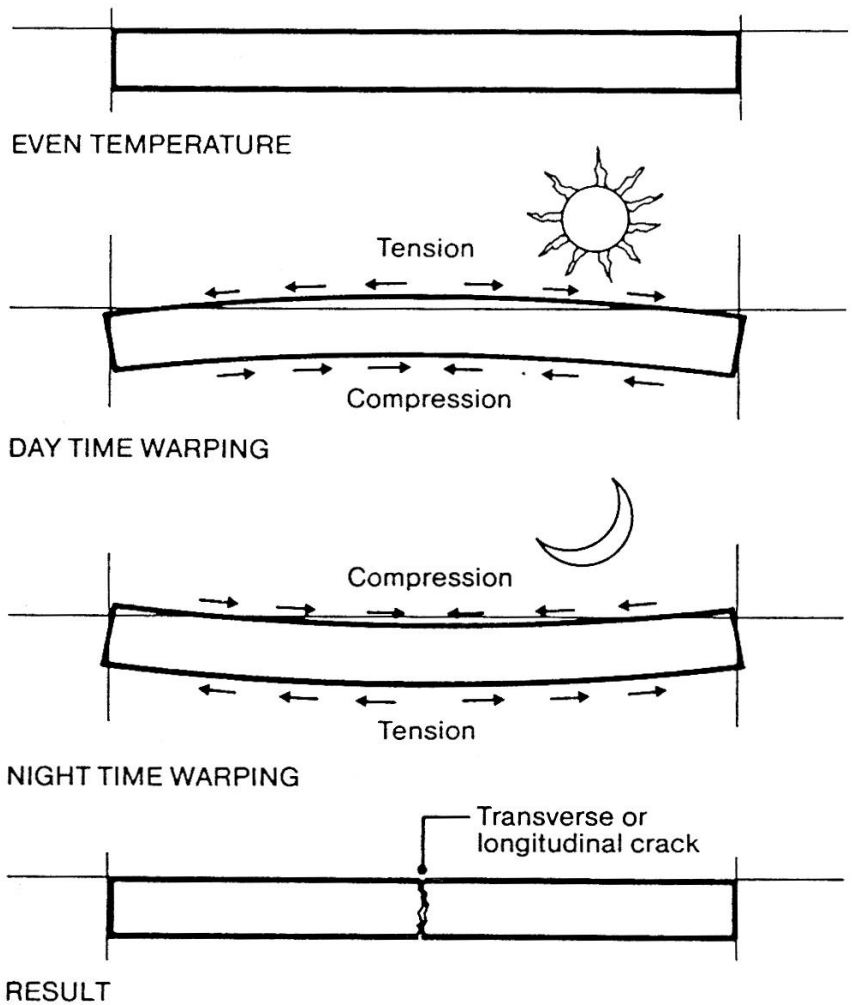

Behaviour under internal stress

- Drying shrinkage and temperature changes cause contraction
- Contraction and friction create tensile stress
- When stress exceeds strength - cracks
- Temp and moisture gradients - curling
- Behaviour determines joint and steel design

Section 6.1 Part A Specifications

A6.1.2 DEFINITIONS

- **Jointed Concrete Pavement (Plain JCP)**
- **Continuously Reinforced Concrete Pavement (CRCP)**
- **Aggregate** - SANS 1083
- **Cement** - SANS 50197-1
- **Cement extenders or supplementary cementitious materials** s:
  - Ground Granulated Blast Furnace Slag: SANS 55167-1
  - Fly Ash: SANS 50450-1
- **Characteristic compressive strength is the cube strength below which no more than 5% of the test results may fall**
- **Valid test result (Fcu)**
- **Water: cementitious binder ratio**

Questions?

Section 6.1 Part A Specifications

A6.1.3 GENERAL

A6.1.3.1 Quality Plan

Prior to commencing with any permanent works, the Contractor shall submit a Quality Plan, for review and acceptance by the Engineer, detailing all checks and hold points relating to construction of the specified product. All work shall be completed in accordance with accepted Plan, with any deviations resubmitted to the Engineer for evaluation and acceptance prior to implementation thereof.

A6.1.3.2 Trial sections

Where so provided for in the pricing schedule, the Contractor shall construct a trial section for each pavement type specified. The location and area of the trials in an area that simulates the permanent work condition shall be as directed by the Engineer. The purpose of the trial is for the Contractor to demonstrate that the equipment, processes and intended concrete mix that he proposes to use will enable him to construct the particular concrete layer in accordance with all the specified requirements. Evaluation and monitoring of the trial section shall include all items listed in the South African Pavement Engineering Manual (SAPEM), Chapter 12 Appendix, Table 19: Concrete Pavement Trial Section Checklist. The Contractor shall calibrate the equipment and refine the mix design and construction process at his own cost.

Section 6.1 Part A Specifications

A6.1.3.3 Weather limitations

a) Responsibility for protection

b) Protection against rain or hail

c) Cold-weather paving

d) Hot-weather paving

e) Hot and windy weather paving

Unless appropriate and adequate protection measures to the plastic concrete are provided, all production of concrete and paving operations shall cease when the prevailing evaporation rate, as determined in accordance with the nomograph given in Clause A 20.1.5.15 of Chapter 20 exceeds 1,0 kg/m²/hr.

Provision has been made in the Pricing Schedule in Chapter 1 for the establishment of a portable weather station to be located in the immediate vicinity of the paving site and positioned at 1,0 m above the level of the pavement being constructed. During paving operations the Contractor shall provide the Engineer with all the relevant data as recorded by the weather station.

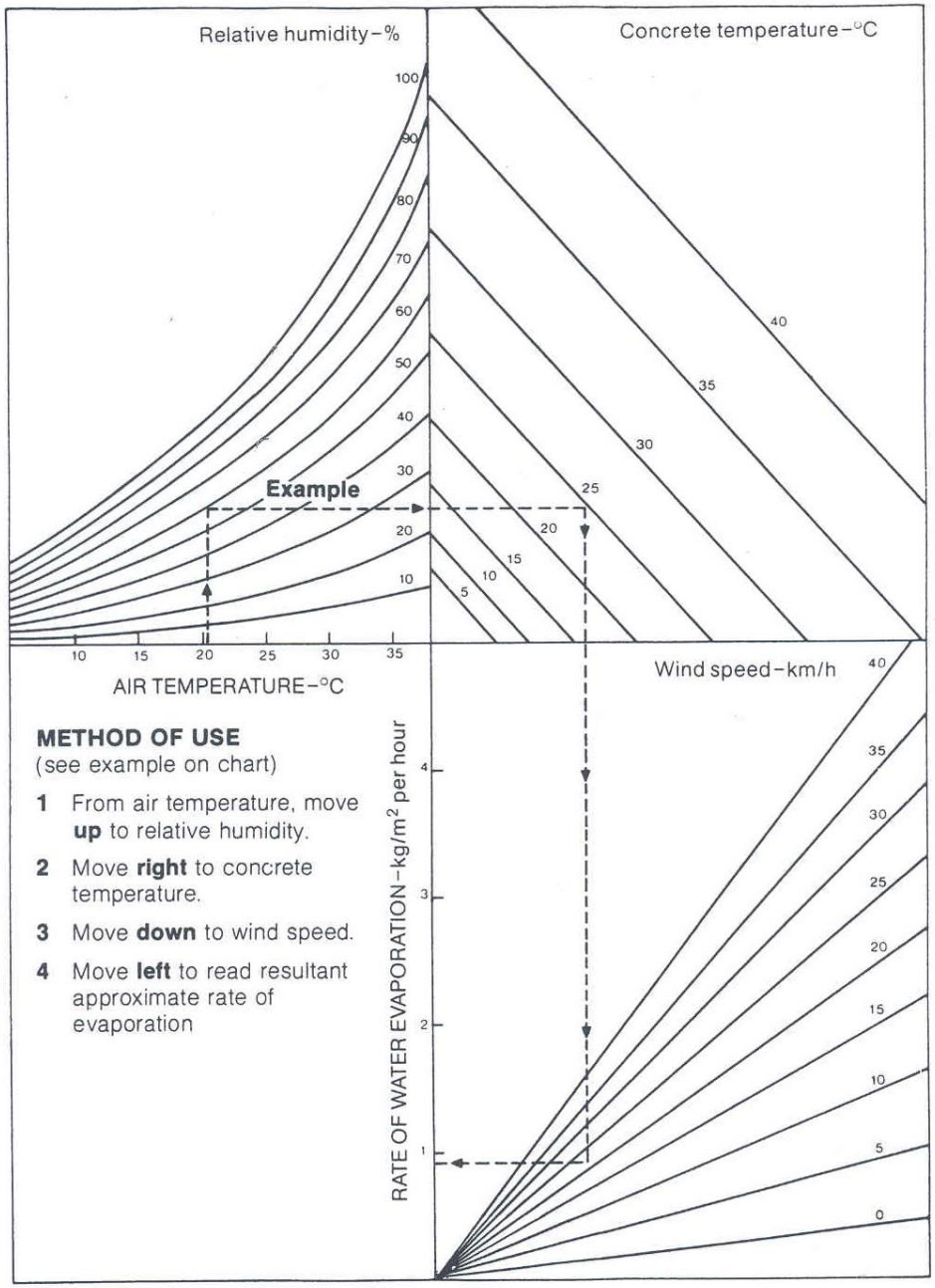
Relative humidity-%
Concrete temperature-°C
100
90
80
70
60
50
40
30
20
10
40
35
30
25
20
15
10
5
Example
10
15
20
25
30
35
AIR TEMPERATURE-°C
Wind speed-km/h
40
35
30
25
20
15
10
5
0
RATE OF WATER EVAPORATION-kg/m² per hour
4
3
2
1
METHOD OF USE
(see example on chart)
1 From air temperature, move up to relative humidity.
2 Move right to concrete temperature.
3 Move down to wind speed.
4 Move left to read resultant approximate rate of evaporation

Section 6.1 Part A Specifications

A6.1.4 DESIGN BY CONTRACTOR / PERFORMANCE BASED SYSTEMS

A6.1.4.1 General

The Contractor shall be responsible for providing suitable materials as prescribed in Clause A6.1.5, determining the mix proportions, and manufacturing the concrete of the required quality and consistency.

A6.1.4.2 Design requirements

a) Water-cement ratio < 0.53

b) Minimum cement content = 320 kg/m^2

c) Specified strength

Highest of

- 35 MPa at 28 days; or
- (ii) 0,85 fc1 where fc1 is the 28-day compressive strength corresponding to a 28-day flexural strength of 4,5 MPa.
- (iii) 0,85 fc2, where fc2 is the 28-day compressive strength corresponding to a water: cement ratio of 0,53.
- (iv) 0,85 fc3, where fc3 is the 28-day compressive strength corresponding to a cement content of 320 kg/m3.

Questions?

Section 6.1 Part A Specifications

A6.1.4 DESIGN BY CONTRACTOR / PERFORMANCE BASED SYSTEMS

A6.1.4.2 Design requirements

d) Workability of the concrete (Consistence)

Slump appropriate for equipment

Vebe where slump less than 35 mm

e) Air content

Only when required

6% rule

Section 6.1 Part A Specifications

A6.1.4.3 Design procedure

a) General

b) Preliminary tests

c) Changes in the mix proportions or the materials

d) Changes in requirements

e) Mix designs

The mix design requirements as specified in Clause A1.2.5.2 will also apply. Testing for mix designs shall be performed by laboratories accredited by SANAS for the relevant tests.

Section 6.1 Part A Specifications

A6.1.5 MATERIALS

A6.1.5.1 Cementitious materials

- Cement shall comply with SANS 50197-1 (EN 197-1) with a strength class of 32,5 or greater, and a rate of strength gain N or greater. Cement shall hold valid certification in the form of a Letter of Authority issued as certified approval pursuant to the Compulsory Specification for cement published by Government Notice 216 0f 15 March 2021. Masonry cement shall not be used. The cement type and class incorporated in the mix shall be appropriate to the type of pavement to be constructed and the placing, finishing and saw cutting constraints envisaged.

- Ground Granulated Blast Furnace Slag - SANS 55167-1

- Fly ash - SANS 50450-1

Blends of cement complying with SANS 50197-1 and supplementary cementitious materials complying with the above standards may be used subject to a maximum of 20 % of the total cementitious content.

Main types	Notation of the 27 products (types of common cement)		Composition (percentage by mass [a])										
			Main constituents										Minor additional Cons-tituents
			Clinker	Blast-furnace slag	Silica fume	Pozzolana		Fly ash		Burnt shale	Limestone		
						Natural	Natural calcined	Sili-ceous	Calca-reous				
			K	S	D[b]	P	Q	V	W	T	L	LL	
CEM I	Portland cement	CEM I	95 - 100	-	-	-	-	-	-	-	-	-	0 - 5
CEM II	Portland-slag cement	CEM II/A-S	80 - 94	6 - 20	-	-	-	-	-	-	-	-	0 - 5
		CEM II/B-S	65 - 79	21 - 35	-	-	-	-	-	-	-	-	0 - 5
	Portland-silica fume cement	CEM II/A-D	90 - 94	-	6 - 10	-	-	-	-	-	-	-	0 - 5
	Portland-pozzolana cement	CEM II/A-P	80 - 94	-	-	6 - 20	-	-	-	-	-	-	0 - 5
		CEM II/B-P	65 - 79	-	-	21 - 35	-	-	-	-	-	-	0 - 5
		CEM II/A-Q	80 - 94	-	-	-	6 - 20	-	-	-	-	-	0 - 5
		CEM II/B-Q	65 - 79	-	-	-	21 - 35	-	-	-	-	-	0 - 5
	Portland-fly ash cement	CEM II/A-V	80 - 94	-	-	-	-	6 - 20	-	-	-	-	0 - 5
		CEM II/B-V	65 - 79	-	-	-	-	21 - 35	-	-	-	-	0 - 5
		CEM II/A-W	80 - 94	-	-	-	-	-	6 - 20	-	-	-	0 - 5
		CEM II/B-W	65 - 79	-	-	-	-	-	21 - 35	-	-	-	0 - 5
	Portland-burnt shale cement	CEM II/A-T	80 - 94	-	-	-	-	-	-	6 - 20	-	-	0 - 5
		CEM II/B-T	65 - 79	-	-	-	-	-	-	21 - 35	-	-	0 - 5
	Portland-limestone cement	CEM II/A-L	80 - 94	-	-	-	-	-	-	-	6 - 20	-	0 - 5
		CEM II/B-L	65 - 79	-	-	-	-	-	-	-	21 - 35	-	0 - 5
		CEM II/A-LL	80 - 94	-	-	-	-	-	-	-	-	6 - 20	0 - 5
		CEM II/B-LL	65 - 79	-	-	-	-	-	-	-	-	21 - 35	0 - 5
	Portland-composite cement [c]	CEM II/A-M	80 - 88					12 - 20					0 - 5
		CEM II/B-M	65 - 79					21 - 35					0 - 5
CEM III	Blast furnace cement	CEM III/A	35 - 64	36 - 65	-	-	-	-	-	-	-	-	0 - 5
		CEM III/B	20 - 34	66 - 80	-	-	-	-	-	-	-	-	0 - 5
		CEM III/C	5 - 19	81 - 95	-	-	-	-	-	-	-	-	0 - 5
CEM IV	Pozzolanic cement [c]	CEM IV/A	65 - 89	-			11 - 35			-	-	-	0 - 5
		CEM IV/B	45 - 64	-			36 - 55			-	-	-	0 - 5
CEM V	Composite cement [c]	CEM V/A	40 - 64	18 - 30	-		18 - 30		-	-	-	-	0 - 5
		CEM V/B	20 - 38	31 - 49	-		31 - 49		-	-	-	-	0 - 5

Table 1: Compressive strength requirements of SANS 50197-1

Strength class	Compressive strength, MPa				Initial setting time
	Early strength		Standard strength		
	2 days	7 days	28 days		min
32,5L[a]	-	≥12,0	≥32,5	≤52,5	≥75
32,5N	-	≥16,0			
32,5R	≥10,0	-			
42,5L[a]	-	≥16,0	≥42,5	≤62,5	≥60
42,5N	≥10,0	-			
42,5R	≥20,0	-			
52,5L[a]	≥10,0	-	≥52,5	-	≥45
52,5N	≥20,0	-			
52,5R	≥30,0	-			

[a] Strength class only defined for CEM III cements

Section 6.1 Part A Specifications

A6.1.5.2 Water

Water for washing aggregates, mixing concrete, and curing shall comply with relevant requirements specified in SANS 51008.

A6.1.5.3 Aggregates for concrete

a) General

Aggregates shall comply with the requirements of SANS 1083 for concrete but subject to the following:

b) Alkali-aggregate reaction

c) Coarse aggregate

(i) Hardness

When tested in accordance with SANS 3001 No AG10, the 10 % FACT value shall comply with the following requirements:

10 % FACT Dry - 210 kN minimum: Wet – 160 kN minimum.

(ii) Flakiness Index

(iii) Nominal Maximum Particle Size (NMPS)

Section 6.1 Part A Specifications

d) Fine aggregate

e) Additional requirements for aggregates

Where instructed by the Engineer, aggregates shall be checked and shall be free of the following deleterious substances:

(i) Tests for the presence of sugar shall be determined in accordance with SANS 3001-AG-30 (SANS 5833) and shall be free from the presence of sugar;

(ii) Tests for soluble deleterious impurities shall be conducted in accordance with SANS 3001-AG-31 (SANS 5834) and shall have minimum compressive strength of 85 % of the reference;

(iii) Test for the presence of material of low density shall be determined in accordance with SANS 3001-AG-?? (SANS 5837) and shall have maximum 0,5 % by mass;

(iv) Tests for soluble salts shall be determined in accordance with SANS 3001-AG-40 (SANS 5849) and shall have maximum 0,5 % by mass;

(v) Tests for water soluble sulfates shall be determined in accordance with SANS 3001-AG-31 (SANS 5850-1) and shall have maximum 0,2 % SO3 by mass; and

(vi) Tests for the presence of shell material shall be determined in accordance with SANS 3001-AG-35 (SANS 5840) and shall be maximum 5 % by mass.

Section 6.1 Part A Specifications

A6.1.5.4 Admixtures to concrete (Lots New)

All admixtures for concrete shall comply with the requirements of SANS 50934 (EN 934), ASTM C494 or AASHTO M194. Admixtures shall be approved by the Engineer and be compatible with the exposure environment and cementitious binder composition. Admixtures shall have no deleterious effects on the steel or concrete, and shall not contain any chlorides, nitrates, sulphides or sulphites, which may be detrimental. Admixtures shall generally be supplied in liquid form and accurately dispensed by a mechanical dosing unit in a manner appropriate to the method batching e.g. dry versus wet batching. Unless extraordinary circumstances dictate otherwise, under no circumstances shall a mixture be dispensed directly onto the mix components. Where extraordinary circumstance does exist, other methods of feeding into the concrete mixture shall be agreed with the Engineer. Where specified, air entraining agents may alternatively comply with the requirements of SANS 50934 (EN 934), ASTM C260 or AASHTO M154.

Where combinations of two or more admixtures are utilised, they shall be tested for compatibility. The total amount of admixtures shall not exceed the maximum dosage recommended by the admixture producer and also shall not exceed 5 % by mass of the total cementitious binder, unless the influence of the higher dosage of admixture on the performance and durability of the concrete is established and taken into account.

If the total quantity of liquid admixture equals or exceeds 3 litres per cubic metre of concrete, the admixture quantity shall be included in the water content of the concrete mixture when calculating the water: cementitious binder ratio.

The alkali content (Na2O-equivalent) of all admixtures shall form part of the calculation of the alkali content of concrete in order to limit the degree of reactivity as specified in Clause A13.4.7.2a) of Chapter 13.

Where so specifically specified, or proposed by the Contractor, any chemical or air-entraining admixtures used shall comply with the requirements of SANS 50934 Parts 1 to 6 and shall be of an approved type and brand. In addition, admixtures shall be subject to such tests as may be prescribed by the Engineer, carried out at an approved testing laboratory at the Contractor's expense to determine the effect of the admixture on the concrete mix including early strength development. Admixtures containing calcium chloride shall not be used.

Admixture properties shall be uniform throughout their use in the work and stored and dispensed in liquid form.

If more than one admixture is used, the admixtures must be compatible with each other such that the desirable effects of all the admixtures used are realized.

Admixtures shall be utilised in compliance with the manufacturer's written instructions. The instructions shall include a statement that the admixture is compatible with the types and quantities of cementitious material intended for use.

If the use of admixtures is not specified, the dosage thereof shall be as recommended by the admixture manufacturer to achieve any enhanced fresh or final concrete characteristics required.

Questions?

Section 6.1 Part A Specifications

A6.1.5.5 Reinforcing steel, tie-bars and dowels

a) Dimensions

b) Reinforcing steel and tie bars

The use of plate type tie bars shall be approved by the Engineer. ??????????

c) Welded steel fabric

d) Dowel bars at transverse joints

Dowel bars shall be mild-steel bars having a smooth, circular section produced on a Kocksblock to ¼ DIN tolerance of the DIN 1013 specification. Dowel bars shall be straight and free from irregularities and without any burred ends, and shall have their sliding ends sawn and bevelled. Cropping of dowels shall not be permitted. The free or un-bonded end of the dowel shall be coated with a bond-breaking coating, as directed by the Engineer, to prevent the concrete from adhering to it. The coating or sheath shall cover at least two-thirds of the dowel length. The bond-breaking coating shall be an approved synthetic material applied at a thickness of 0,5 mm in accordance with the manufacturer's recommendations. The sheath shall be a tough polyethylene material with an average thickness of 1,0 mm ± 0,2 mm.

The use of alternative plate dowels shall be approved by the Engineer.

Transverse contraction joint

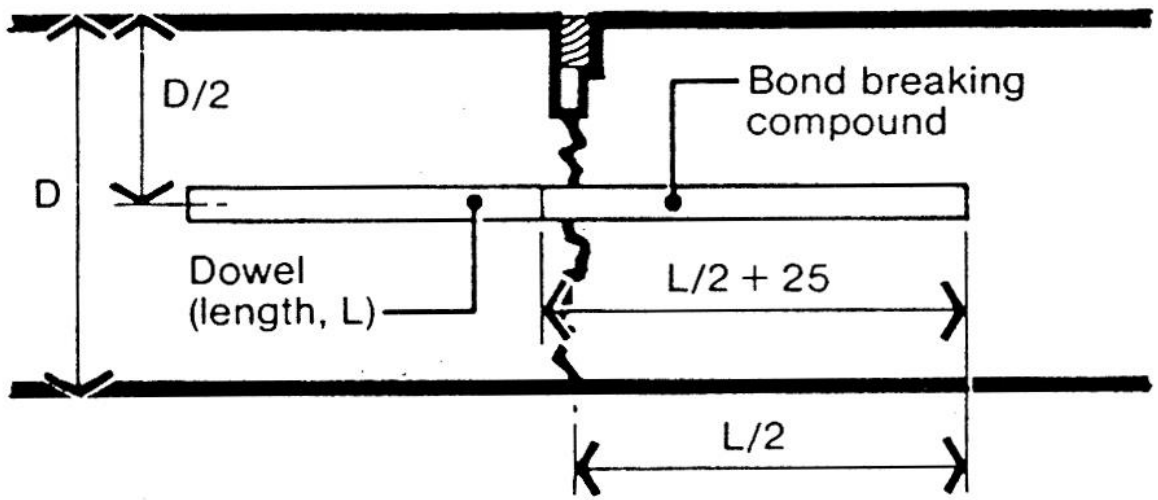

DOWELLED JOINT –
JOINTED UNREINFORCED PAVEMENT

Dowels

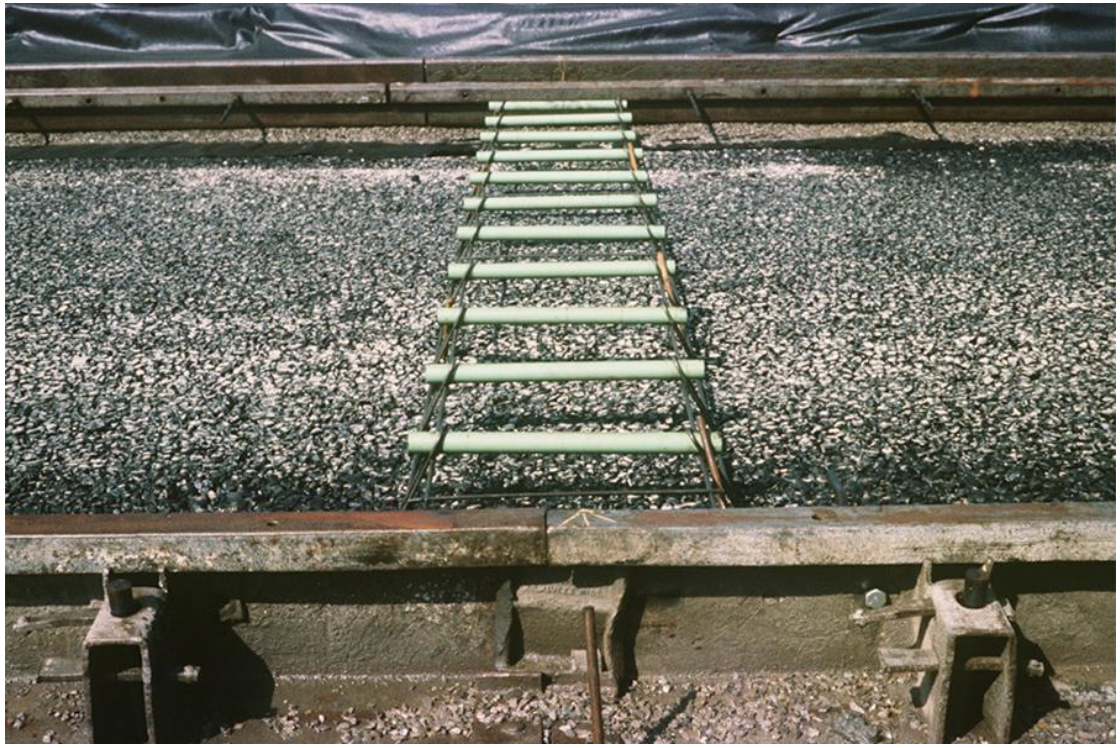

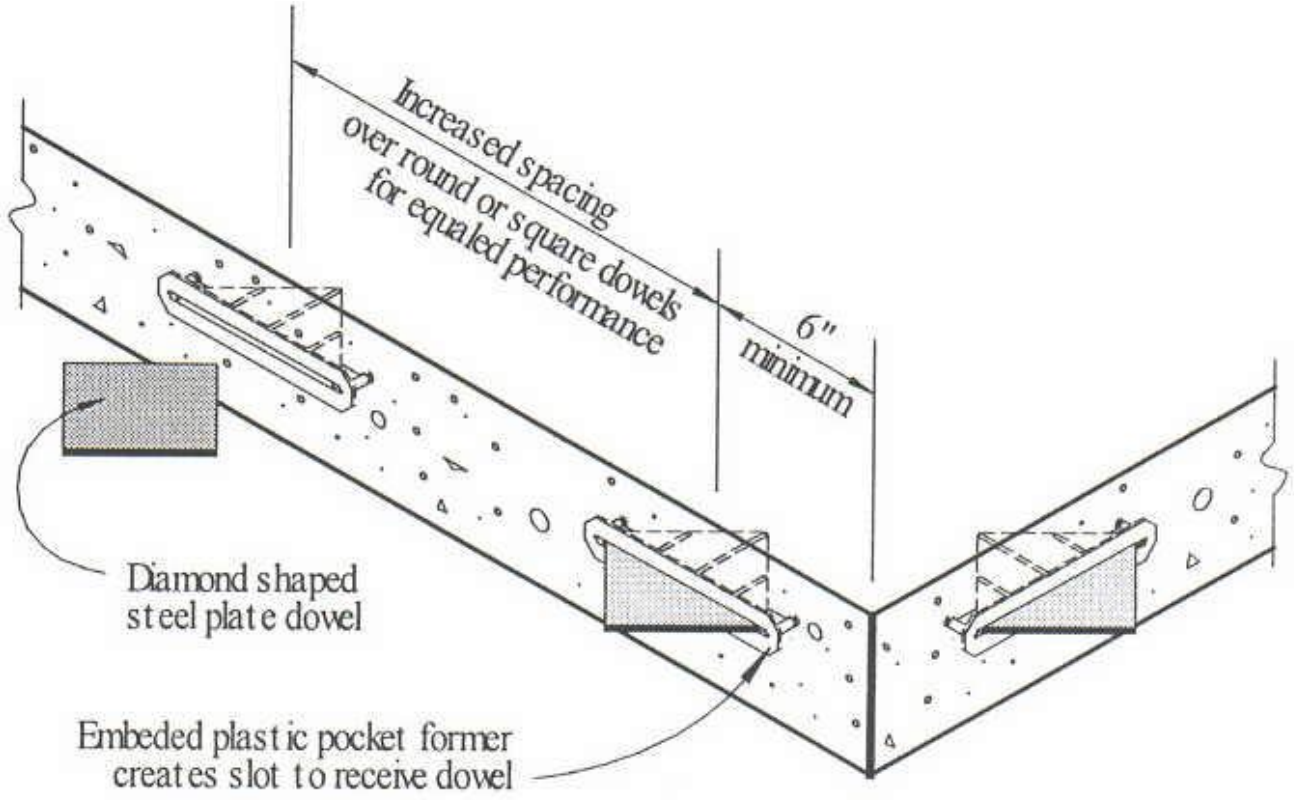
Increased spacing
over round or square dowels
for equaled performance
6"
minimum
Diamond shaped
steel plate dowel
Embeded plastic pocket former
creates slot to receive dowel

Figure 9.

Figure 13.

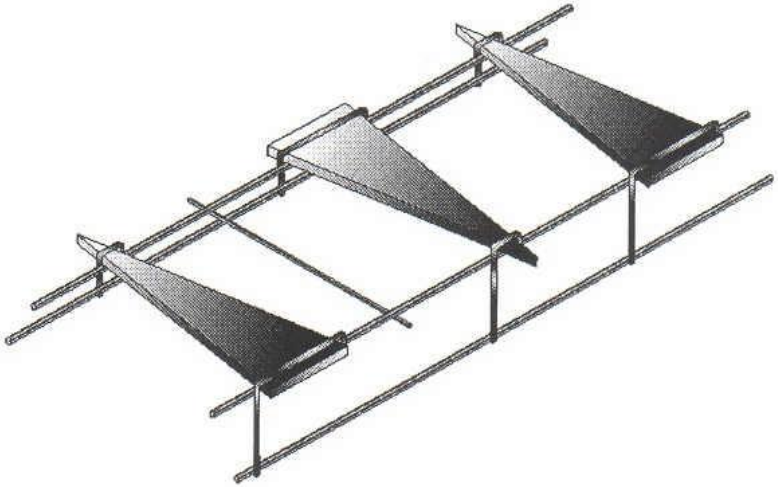

Figure 5.

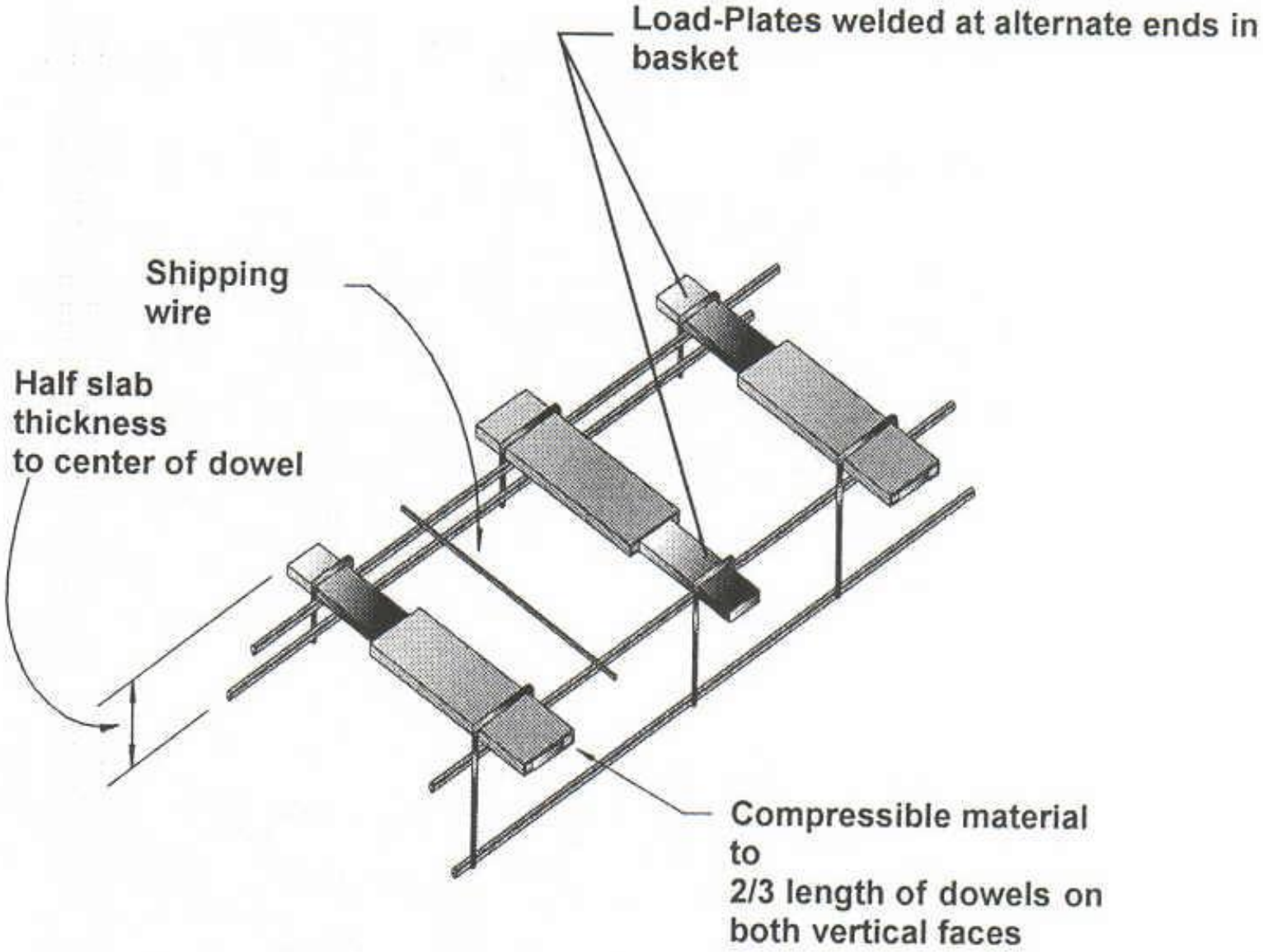
Load-Plates welded at alternate ends in basket
Shipping wire
Half slab thickness to center of dowel
Compressible material to 2/3 length of dowels on both vertical faces

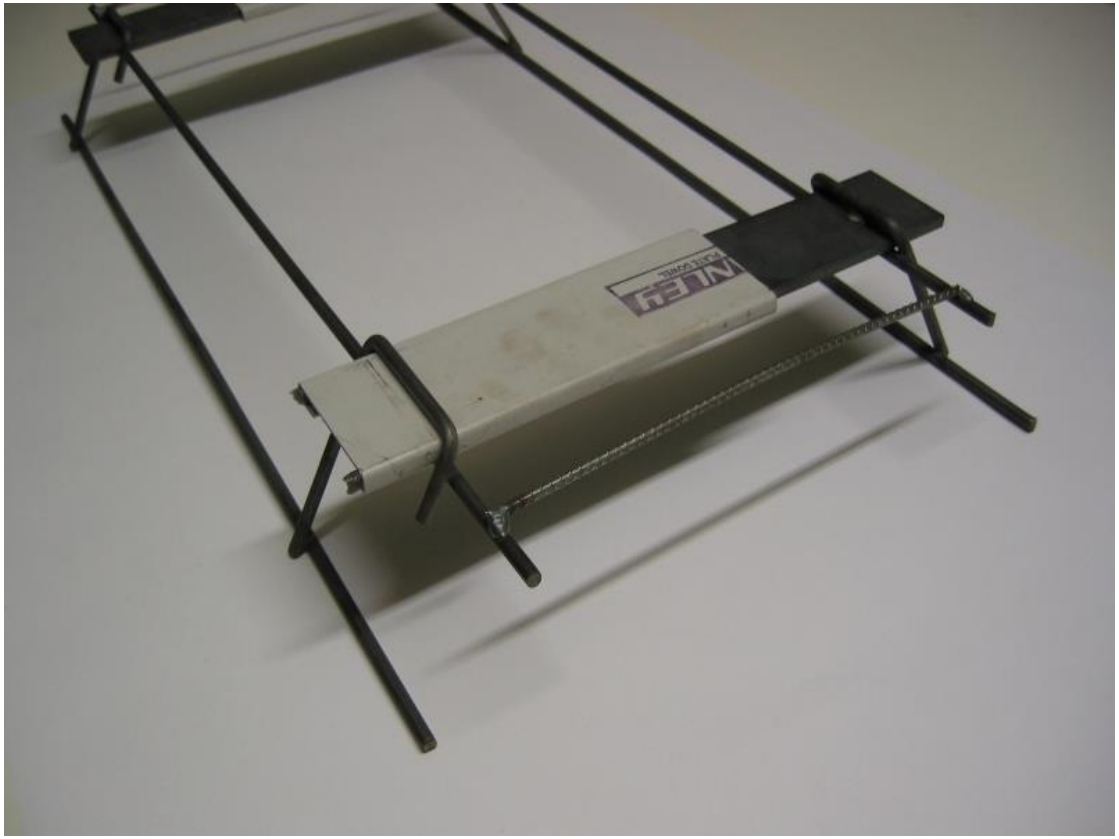

Section 6.1 Part A Specifications

A6.1.5.6 Curing compound

The curing compound used shall be a white-pigmented resin-based curing compound containing no water and which complies with the requirements of ASTM C 309, except that the water loss requirement be substituted with the efficiency-index as determined in accordance with BS 7542. The efficiency-index shall exceed 90 % at an application rate of 0, 2 l/m2. Testing available in SA??????

A recent certificate not older than 3 months from an approved testing laboratory shall be submitted, certifying that the curing compound complies with the specifications. Further testing shall be conducted at regular intervals.

Section 6.1 Part A Specifications

A6.1.5.7 Materials for joints

a) Joint filler for expansion joints

Joint filler for expansion joints shall be manufactured from a closed-cell polyethylene and the filler strips shall be provided with tear-off cover strip. The joint filler shall comply with the requirements of AASHTO M 153, and the particular type used shall be subject to the Engineer's approval. Joint filler for isolation joints shall be pre-formed expansion joint filler for concrete (bituminous type) complying with ASTM D 994.

b) Silicone sealant

Unless specifically approved by the Engineer, the joint sealant shall be silicone specifically formulated for use on concrete.

(i) Sealant The silicone sealant shall be a one-component material with low-modulus properties. The use of acid cure sealants shall not be permitted. Silicone joint sealant must be compatible with the surface it is applied to and have properties shown in the Table A6.1.5-1: **Number of changes**

Section 6.1 Part A Specifications

A6.1.5.7 Materials for joints

b) Silicone sealant

(ii) Silicone sealant applied in terms of a Product Performance Guarantee System

Sealant installed in accordance with the above shall be in accordance and be assessed in terms of Part D of these specifications

(iii) Additional materials for silicone sealant

Questions?

Section 6.1 Part A Specifications

A6.1.6 CONSTRUCTION EQUIPMENT

This has been separated out from construction

A6.1.6.2 Concrete batching plant

The intended concrete batching plant or supply source shall be of sufficient capacity to ensure that, as far as practically possible, there is an uninterrupted supply of concrete during paving operations. Concrete may be produced in either of the following manner:

- Batching on site by an approved and dedicated plant
- Sourced from a ready-mix commercial supplier

Where concrete is supplied by a commercial source outside the direct control of the Engineer, the concrete supplier shall ensure compliance with the requirements of SANS 50206 (SANS 878)***. The Contractor shall have full responsibility to implement process control testing in accordance with the specifications. Commercial concrete suppliers shall ensure that the plant, measuring, mixing, transporting and associated processes are audited by a recognised independent body in accordance with the following requirements for commercially sourced concrete: Old SARMA Audits

(i) ISO 9002 (Standardisation);

(ii) ISO 14001 (Environment);

(iii) ISO 39001 (Road transport safety management);

(iv) OHSAS 18001 (Legal compliance);

(v) SANS 50206 (SANS 878), ISO 22965-2 or ISO 9001 (Quality management system for concrete production).

Section 6.1 Part A Specifications

A6.1.6.3 Side-form paving Unlikely in future

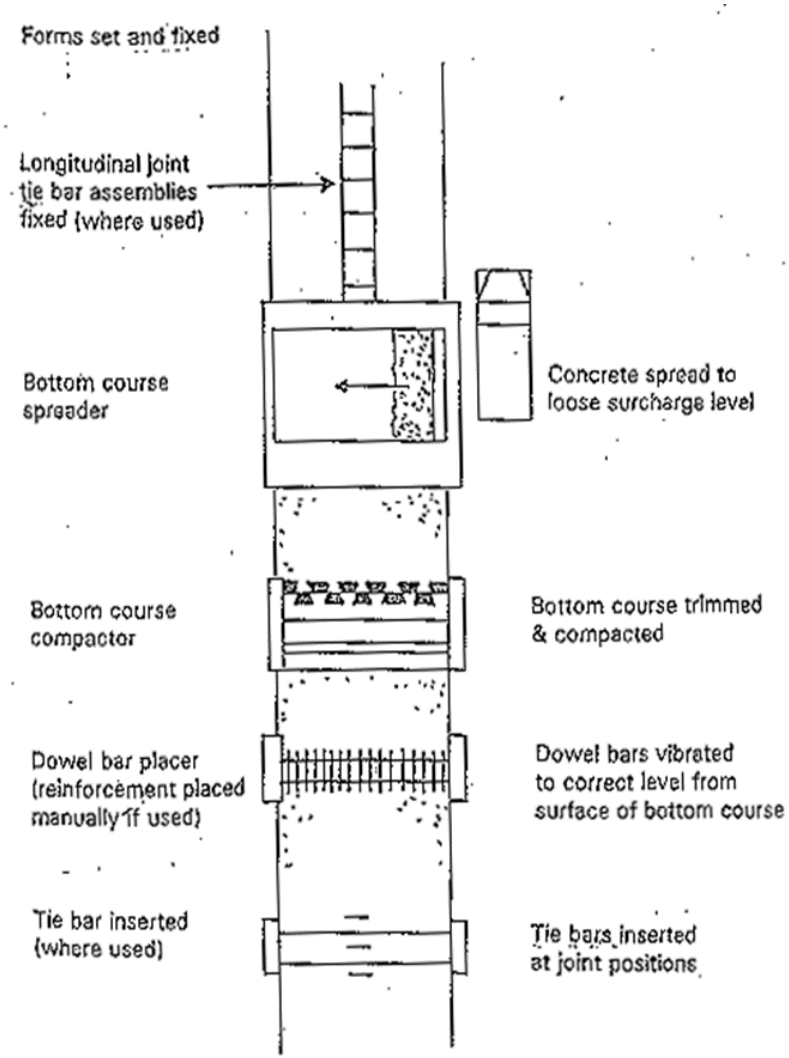

Section 6.1 Part A Specifications

A6.1.6.3 Side-form paving Unlikely in future

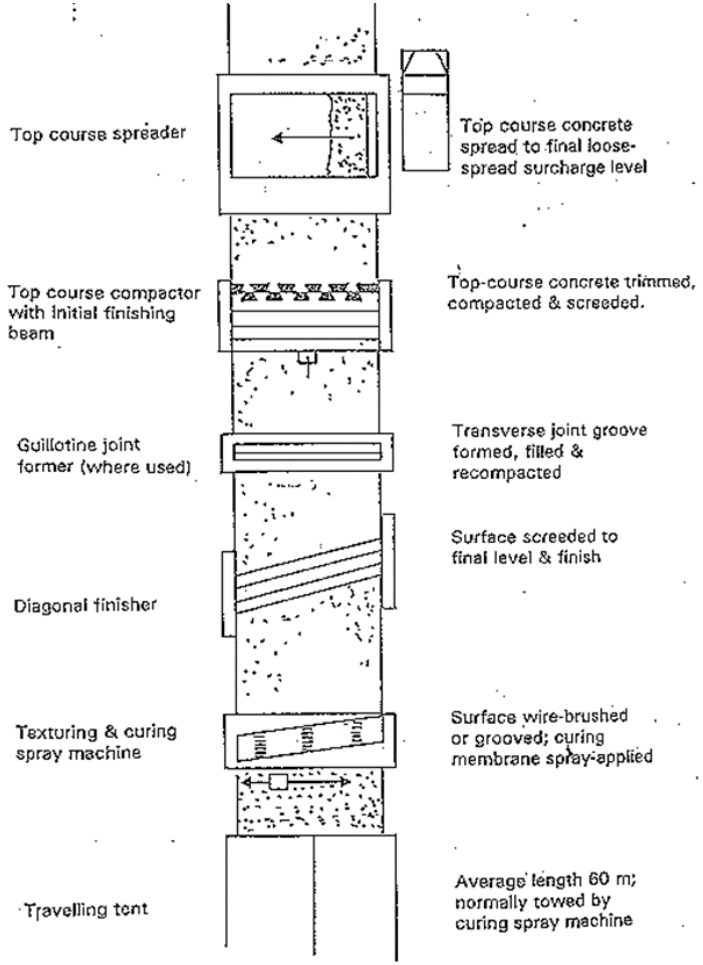

Section 6.1 Part A Specifications

A6.1.6.3 Side-form paving Unlikely in future

a) Side forms

Tolerances

b) Paving train

(i) Hopper/spreader

(ii) Consolidation/compaction equipment

(iii) Initial finisher

(iv) Final finisher

(v) Frame mounted canopy.

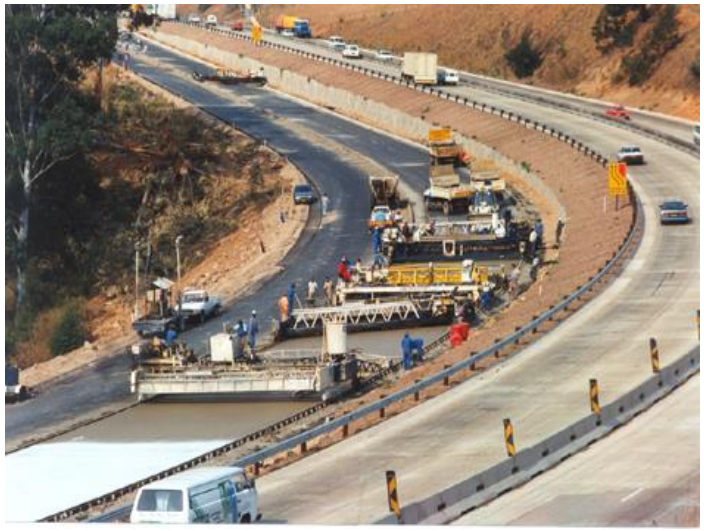

Section 6.1 Part A Specifications

A6.1.6.3 Side-form paving Unlikely in future

a) Side forms

b) Paving train

(i) Hopper/spreader

(ii) Consolidation/compaction equipment

(iii) Initial finisher

(iv) Final finisher

(v) Frame mounted canopy.

Section 6.1 Part A Specifications

A6.1.6.3 Side-form paving Unlikely in future

a) Side forms

b) Paving train

(i) Hopper/spreader

(ii) Consolidation/compaction equipment

(iii) Initial finisher

(iv) Final finisher

(v) Frame mounted canopy.

Section 6.1 Part A Specifications

A6.1.6.3 Side-form paving Unlikely in future

a) Side forms

b) Paving train

(i) Hopper/spreader

(ii) Consolidation/compaction equipment

(iii) Initial finisher

(iv) Final finisher

(v) Frame mounted canopy.

Section 6.1 Part A Specifications

A6.1.6.4 Slip-form paving

a) Slip-form paver

Section 6.1 Part A Specifications

A6.1.6.4 Slip-form paving

b) Electronic control systems

Section 6.1 Part A Specifications

A6.1.6.5 Burlap drag equipment

A6.1.6.6 Texture grooving equipment

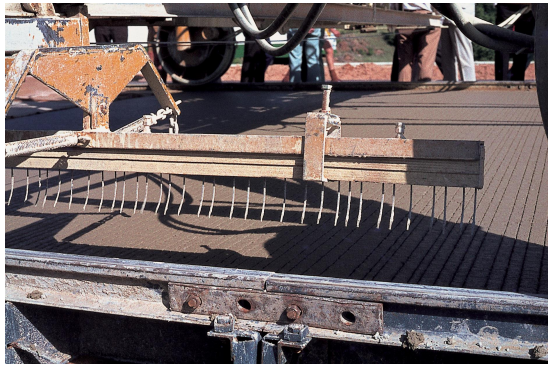

A6.1.6.7 Applicator for curing compound membrane

Questions?

Section 6.1 Part A Specifications

A6.1.7 EXECUTION OF THE WORKS

A6.1.7.1 Preparing the underlying layers

A6.1.7.2 Batching and mixing of concrete

a) General

b) Cement and supplementary cementitious materials

Cement and supplementary cementitious material may only be used if stored and maintained at a temperature less than 45°C. In hot weather concreting conditions, the cement and supplementary cementitious material storage facilities shall be painted with white high solar reflectance paint and insulated to reduce any temperature rise in the stored cement or supplementary cementitious material.

Cement shall not be kept in storage for longer than 8 weeks without the Engineer's permission, and

c) Aggregates

Aggregates exposed to a chloride (XS) (Structures Chapter) environment shall be covered to protect them from salt contamination.

When the ambient temperature reaches and at all times when it exceeds 30°C, only the coarse aggregate shall be sprayed with water to assist cooling by evaporation.

Section 6.1 Part A Specifications

A6.1.7 EXECUTION OF THE WORKS

A6.1.7.2 Batching and mixing of concrete

d) Water

In hot weather concreting conditions, the sides and tops of water tanks for mixing water, including pipework leading to and from tanks, shall be insulated.

e) Storage capacity

Sufficient to ensure that no interruptions to the progress of the work will be occasioned by any lack of materials.

f) Deteriorated material

g) Proportioning the components

Cementitious binder - accurate to within 2 % of the required mass.

Water - accurate to within 2 % of the required quantity.

Aggregates - accurate to within 3 % of the required quantity.

Admixture - All admixtures shall be dispensed in quantities accurate to within 2 % by mass of the desired quantity. The mechanical dosing unit shall be checked daily for accuracy using a nominal dispensing volume, typically 2 litres, or as recommended by the dosing unit manufacturer or admixture supplier. At least once a week, the dosing unit shall be checked for accuracy using the full dispensing volume suited to the concrete mixing procedures employed on site, typically for 6 cubic metre concrete batch mixed by a standard mixing truck and proportionally for other standard batch volumes.

Section 6.1 Part A Specifications

A6.1.7 EXECUTION OF THE WORKS

A6.1.7.2 Batching and mixing of concrete

h) Mixing the concrete

The mixing period for the materials shall be at least 90 seconds and may be reduced only if the Engineer is satisfied that the reduced mixing time will produce concrete with the same strength and uniformity as concrete mixed for minimum 90 seconds. The reduced mixing time, however, shall be not less than 50 seconds or the manufacturer's recommended mixing time, whichever is the longer. A suitable timing device shall be attached to the mixer to ensure that the minimum mixing time for the materials has been complied with.

The first batch to be run when starting with a clean mixer, shall contain only 75 % of the required quantity of coarse aggregate to make provision for coating the mixer drum. Refer Clause A13.4.7.12g) of Chapter 13 for a similar provision for richer concrete mix placed at horizontal construction joints.

Section 6.1 Part A Specifications

A6.1.7 EXECUTION OF THE WORKS

A6.1.7.2 Batching and mixing of concrete

i) Transporting the concrete

The fresh concrete shall be protected against rain, heat, direct sunlight and/or evaporation by means of covers on all open vehicles. No additional water may be added in transit or where delivered.

The time lapse from the moment when the cement and aggregate are intermingled up to the time of placing and compacting the concrete shall not exceed 60 minutes when concrete is transported in truck agitators, and shall not exceed 45 minutes in mild weather, or 30 minutes when the concrete temperature is 30°C or higher, when transported in ordinary trucks.

Section 6.1 Part A Specifications

A6.1.7.3 Placing, Compacting and Finishing Concrete

a) General requirements for both side-form and slip-form paving

(i) Maintaining continuity during placing

The Contractor shall make adequate advance arrangements for preventing delay in delivering and placing the concrete. An interval of more than thirty minutes between the placing of any two consecutive batches or loads of concrete shall constitute sufficient reason for the Engineer to have the paving operations stopped, and the Contractor shall, then at his own expense, make a construction joint in the concrete already placed, at the location and of the type directed by the Engineer. Paving operations shall be continuous, and the rate of paving shall be adjusted to suit the rate of delivery of the concrete.

(ii) Time for placing and compacting

The placing, compacting and finishing of the concrete shall be carried out as quickly as possible, and the operations shall be so arranged that, in any transverse section of the pavement, the concrete shall be fully compacted and finished within 2,5 hours of having been mixed. This time shall be reduced by half an hour for every 5°C by which the concrete temperature is above 20 °C at the time of placing, unless otherwise permitted by the Engineer.

Unless adequate lighting facilities, approved by the Engineer, are provided beforehand by the Contractor, the placing of concrete pavement shall cease in good time so that the finishing operation can still be completed during daylight hours.

Section 6.1 Part A Specifications

A6.1.7.3 Placing, Compacting and Finishing Concrete

a) General requirements for both side-form and slip-form paving

(iii) Compacting

The concrete shall be fully compacted by means of approved equipment and shall be free from honeycombing and planes of weakness. The average amount of air voids in concrete cores shall not exceed 1,5% when measured by the visual assessment method described in SANS 5865 (SANS 3001-CO3-5).

Over-vibration resulting in segregation, surface laitance, or leakage (or any combination of these) shall not be acceptable.

No paving in the downhill direction will be allowed if tearing of the concrete occurs. The Contractor shall take the necessary measures to the satisfaction of the Engineer to prevent tearing of the concrete, for example by carrying out the paving in the uphill direction.

(iv) Width of placing

The width of concrete pavement strip to be placed in a single uninterrupted operation shall be as agreed with the Engineer so that longitudinal construction joints do not, as far as practical, fall within the wheel paths of the relevant lanes.

Section 6.1 Part A Specifications

A6.1.7.3 Placing, Compacting and Finishing Concrete

a) General requirements for both side-form and slip-form paving

(v) Placing of tie bars

Tie-bars shall be placed as indicated on the drawings and shall be placed at right angles to joints. Tie-bars shall be free from paint, grease or other matter which may affect bonding with the concrete.

At longitudinal construction joints the one half of each tie-bar shall be supported on the subbase by means of suitable stools, while the other half shall project into the adjacent lane through the side forms. The arrangement and spacing and fixing of the tie bars and stools shall be such that they shall be supported in position without deflection or displacement when a dead load of 100 kg is applied or during placement and compaction of the concrete. Mild steel tie-bars at longitudinal joints may be bent parallel to the edge of the first lane constructed and later on straightened into its final position before the concrete of the adjacent lane is placed. The method of fixing and supporting the tie-bars shall be approved by the Engineer. Where tie-bars are bent and later straightened due to traffic accommodation constraints, any damage to the concrete shall be made good by the Contractor.

At longitudinal weakened-plane hinge joints the bars shall be firmly supported in position by steel supporting devices fixed to the subbase. If the paver or other paving equipment is equipped with a device for placing tie-bars into the plastic concrete, such device may be used only after it has been demonstrated that the tie-bars will be located in their correct positions after the slab has been compacted and finished.

Tiebars

Tiebars

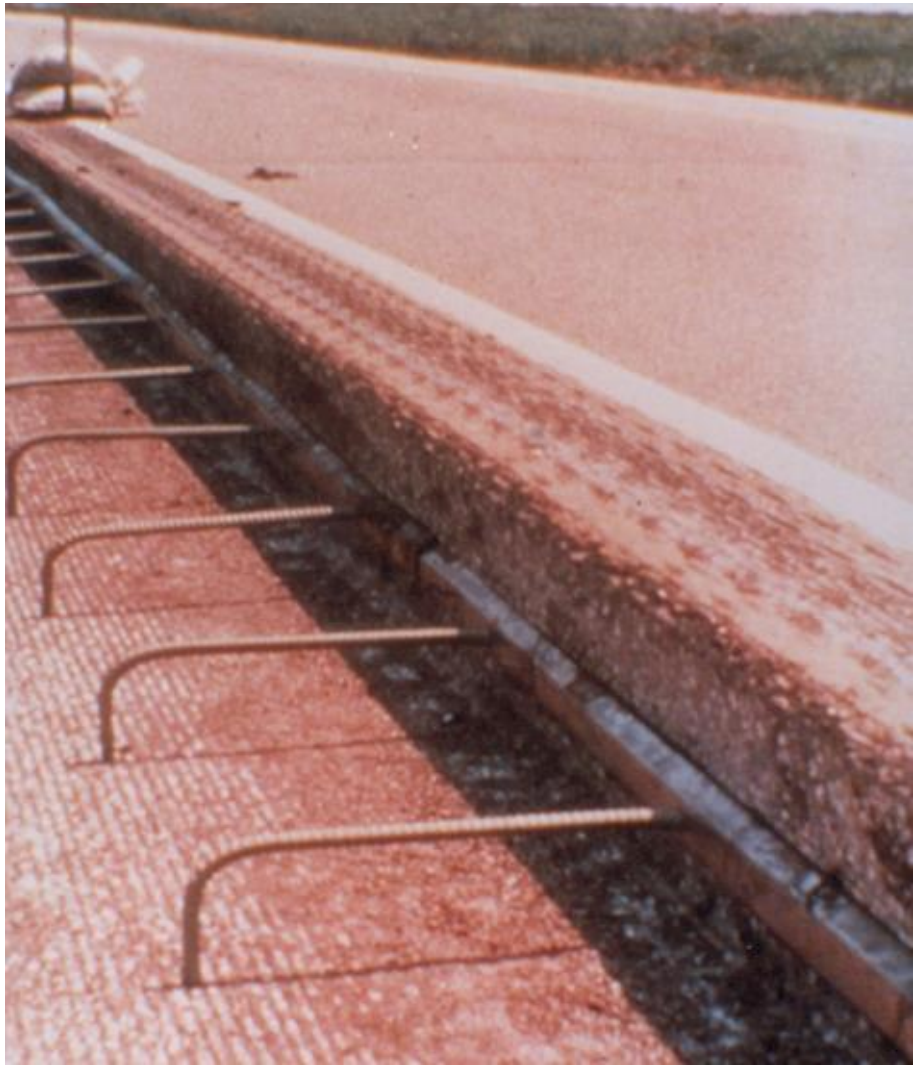

Section 6.1 Part A Specifications

A6.1.7.3 Placing, Compacting and Finishing Concrete

a) General requirements for both side-form and slip-form paving

(vi) Placing of dowel bars

Dowel bars shall be installed at locations as indicated on the drawings. Dowels shall be fixed rigidly both in horizontal and vertical alignment parallel to the centre line of the road and the surface of the slab, by robust supporting frames or cradles which do not project within 150 mm of the joint and are left permanently in place. The frames shall be fixed to the subbase so that they will be stable and remain undisturbed during paving operations. The free end of the dowel shall not be tack-welded to the frame but shall be held in position by soft binding wire. Dowels may be mechanically inserted, in which case no frames will be required for securing the dowels, provided that conclusive evidence is submitted that the proposed method is an accepted method and has already been used successfully. Dowel alignment shall be accurate to within the tolerance given in Clause A6.1.8.

Section 6.1 Part A Specifications

A6.1.7.3 Placing, Compacting and Finishing Concrete

a) General requirements for both side-form and slip-form paving

(vii) Placing of continuous reinforcing steel in continuously reinforced concrete pavement

The continuous steel reinforcement shall be free from dirt, oil, paint, grease or other organic materials, which may adversely affect or reduce the bond with the concrete. Loose surface rust caused by lengthy storage shall be removed.

The arrangement and spacing and fixing of the chairs or stools shall be such that the reinforcing shall be supported in position without deflection or displacement when a dead load of 100 kg is applied or during placement and compaction of the concrete. The chairs shall be so supported as to prevent them overturning on the subbase when the paving train passes over them.

Transverse construction joint

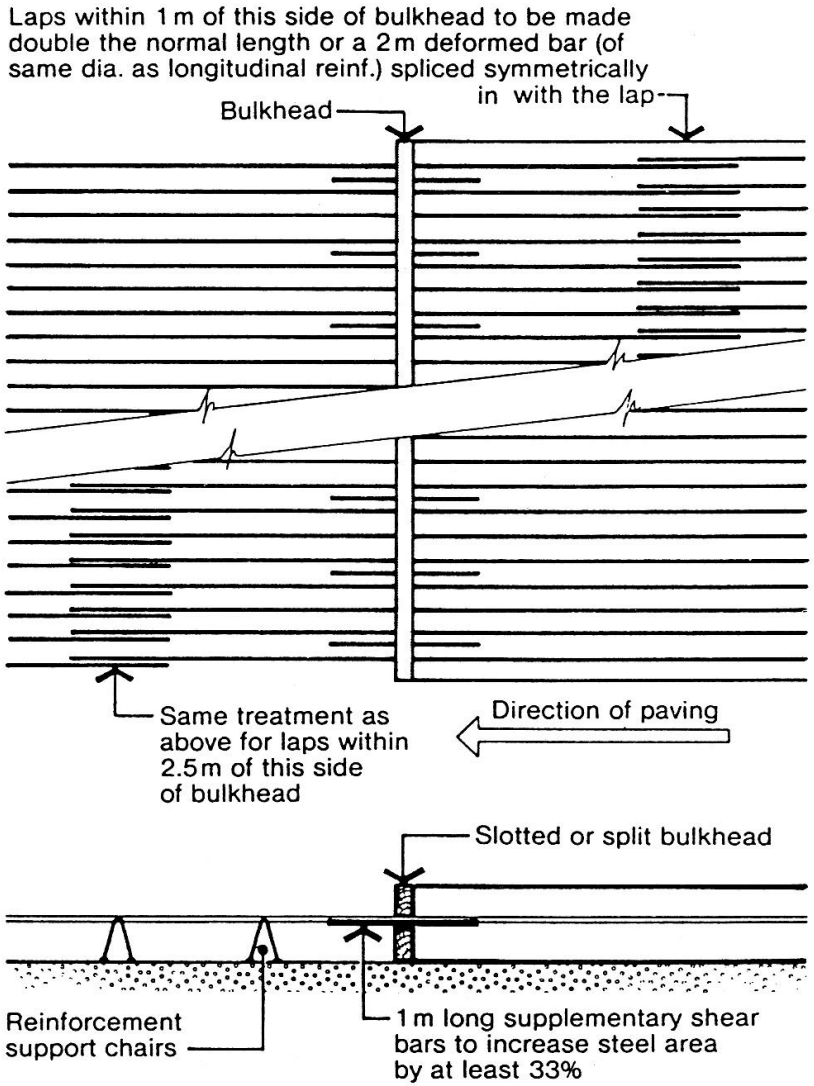

Terminal joints in CRCP

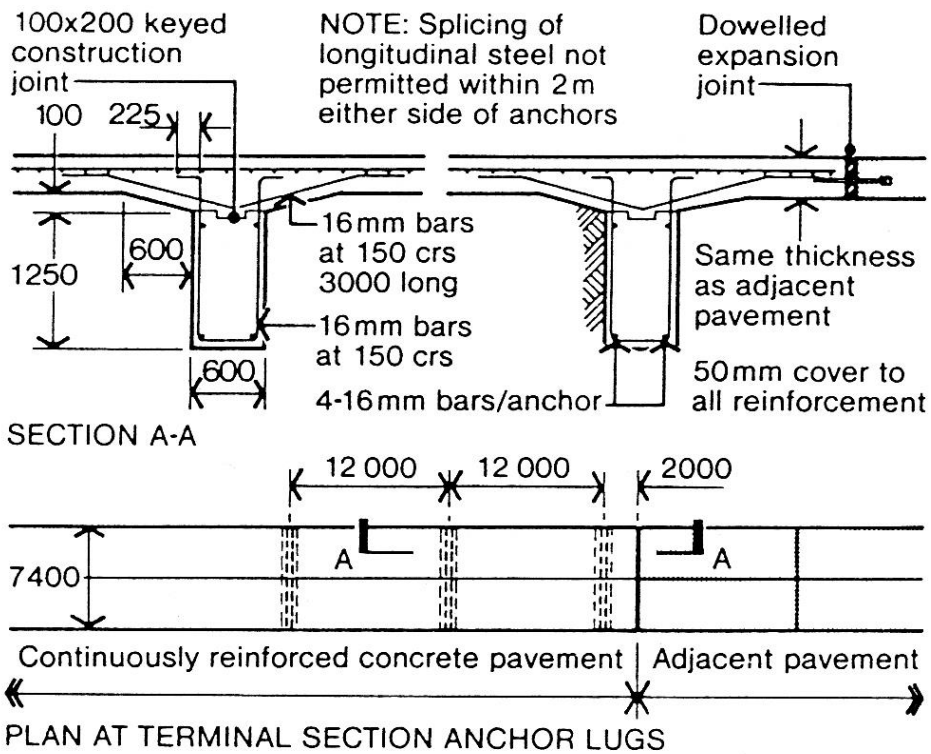

Section 6.1 Part A Specifications

A6.1.7.3 Placing, Compacting and Finishing Concrete

a) General requirements for both side-form and slip-form paving

(ix) Burlap drag finish

This texture shall be obtained by first applying a burlap-drag, as specified in Clause A6.1.6.5, as a finish to the concrete surface. The first pass of the burlap drag shall be made as soon as construction operations permit and before the wet sheen has disappeared from the surface. Burlap dragging shall be repeated until a gritty and uniform texture having the required finish and depth of texture has been obtained.

Every morning the burlap drag shall be wetted and shall kept moist throughout the day. At the end of each day's production the burlap mats shall be cleaned or discarded and replaced with new burlap if cleaning is not possible.

Section 6.1 Part A Specifications

A6.1.7.3 Placing, Compacting and Finishing Concrete

a) General requirements for both side-form and slip-form paving

(x) Surface texturing

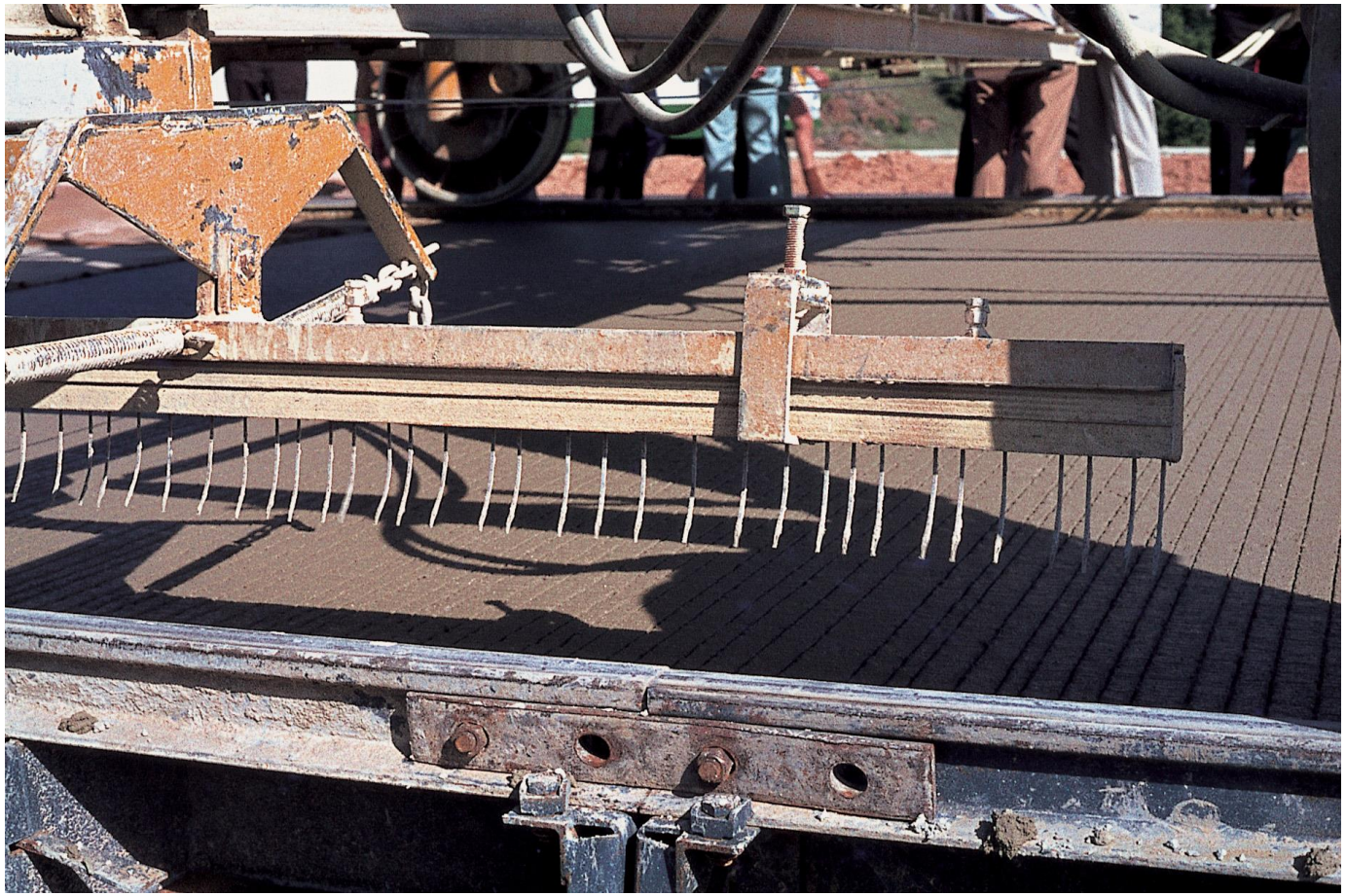

Section 6.1 Part A Specifications

A6.1.7.3 Placing, Compacting and Finishing Concrete

a) General requirements for both side-form and slip-form paving

(xi) Curing

Section 6.1 Part A Specifications

A6.1.7.3 Placing, Compacting and Finishing Concrete

b) Side-form paving

(i) Side form set up

(iii) Compaction

(iv) Final finishing

(v) Constructing the pavement in more than one contiguous strip

(vi) Removal of side forms

Section 6.1 Part A Specifications

A6.1.7.3 Placing, Compacting and Finishing Concrete

c) Slip-form paving

(i) Placing and spreading

(ii) Compaction

(iii) Finishing

The level and grades of the surface shall be automatically controlled within the prescribed tolerances by means of a sensing device running on guide wires or a suitable 3D string-less system as approved. The consistency of the concrete shall be so controlled that the edge slump will not exceed the tolerance specified in Clause A6.1.8. If approved by the Engineer, metal side-forms of sufficient thickness and stability may be used to maintain the proper shape and line.

After the concrete layer has been completed by the finishing devices incorporated in the slip-form paving equipment, the surface of the concrete shall be checked by means of a straight-edge of not less than 3,0 m in length. High spots indicated by the straight-edge shall be removed by hand floats.

After the final finishing and texturing of the concrete, but before curing, the pavement edges shall be rounded manually to the prescribed radius.

(iv) Constructing the concrete pavement in more than one contiguous strip

(v) Track support

The Contractor shall at his own cost ensure that adequate track support is provided to suit the needs of the slip-form paver, either by extending the upper pavement layers or by providing alternative support layers.

d) Placing, compacting and finishing with hand equipment

Where the slabs are too small or irregular, or the site is so restricted as to render the use of the methods described in Part A of this Chapter impracticable, concrete shall be placed, compacted and finished in accordance with Part B of this Chapter.

COMACO

Discharging

- Place directly on grade
- Place with spreader
- Place with belt placer
- Safety first

20099

Section 6.1 Part A Specifications

Section 6.1 Part A Specifications

A6.1.7.4 Joint Forming

a) Construction joints

Section 6.1 Part A Specifications

A6.1.7.4 Joint Forming

a) Construction joints

b) Weakened-plain longitudinal hinge joints

c) Weakened-plain transverse contraction joints

d) Expansion joints

The sealing groove in the upper portion of the expansion joints shall be sealed with a preformed neoprene compression seal or any other appropriate sealant prescribed or approved.

e) Sawing of joints

The Contractor shall be responsible for determining the optimum time for the sawing of joints. This shall depend on the strength gain characteristics of the cementitious products incorporated in the concrete mix, the hardness of the aggregate and weather conditions at the time of placing. The Contractor shall use the type of blade and equipment best suited to the hardness of the concrete, type of aggregate and the site conditions in order to prevent uncontrolled cracking and any spalling adjacent to the joint being sawn.

Sufficient standby power saws shall be held available by the Contractor, ready for use, at all times when concrete is being placed in the pavement. Immediately after sawing, the joint grooves shall be washed out with a jet of clean water to remove all fine material which shall be appropriately disposed of at an approved site. The joints shall then be sealed temporarily by means of an approved material, flush with the permanent surface. No traffic of any kind shall be allowed on the pavement until all the joints have been permanently sealed.

f) Opening to traffic

No vehicle with an axle load exceeding 20 kN shall be permitted to travel over the completed surface within 14 days after it has been completed, or such longer period as may be directed by the Engineer.

Section 6.1 Part A Specifications

A6.1.7.5 Joint Sealing

Joints shall be permanently sealed before the pavement is opened to any traffic.

a) Silicone sealant

(i) Materials

(ii) Installation

b) Liquid sealant for joints between concrete and asphalt pavements

Questions?

Section 6.1 Part A Specifications

A6.1.8 WORKMANSHIP

a) Process control

The Contractor shall conduct all and a sufficient number of tests necessary for ensuring compliance with the requirements, as specified in this Chapter, during all phases of the work. Accelerated 20-hour compressive-strength tests as described in Clause A20.1.5.16 of Chapter 20 shall be conducted regularly with a view to predicting the 28-day compressive strength of the concrete in consultation with the Engineer. Where the accelerated tests indicate that the required 28-day compressive strengths will not be attained, the Contractor shall immediately effect the necessary changes to the materials and/or mix proportions in order to ensure that further work will comply with the requirements.

Section 6.1 Part A Specifications

A6.1.8 WORKMANSHIP

b) Acceptance control

Routine inspection and testing will be carried out by the Engineer to determine whether the quality of materials and workmanship complies with the requirements of this section. The lot sizes and sampling for compressive strength shall be done in accordance with Clause A20.1.7 of Chapter 20, using Judgement Plan B as stated in Clause A20.1.7.5b)(ii) of Chapter 20 for acceptance control. The assessment of test results and measurements shall be done in accordance with the provisions of Chapter 20 as relevant. In addition to the above, the following shall also apply:

(i) The Engineer may, at his discretion, decide to use the Contractor's test results in the judgement plan if he is satisfied that the Contractor has complied with all the process control requirements.

(ii) The relationship between the 28-day compressive and the 28-day flexural strengths of the concrete established by the preliminary tests shall be monitored during paving operations by regular tests at the discretion of the Engineer.

(iii) For this purpose sets of three beams and three cubes shall be manufactured from the same batch of concrete and tested for flexural and compressive strength respectively. If the test results indicate a relationship which deviates from that established by the preliminary tests, the specified compressive strength, as specified in Clause A6.1.4.2 shall be adjusted accordingly.

(iv) Where air entrainment has been included in the specification, and any test for air content shows a value falling outside the specified limits, the quantity of air-entraining agent added to the concrete mix shall be adjusted, until the air content of the concrete is within the specified limits.

Section 6.1 Part A Specifications

A6.1.8 WORKMANSHIP

c) Construction tolerances

The work in this Chapter shall be constructed to the tolerances given below.

(i) Level and grade

The lot shall comply with the requirements specified if at least 90 % of all levels are within the H90 tolerance of 15 mm before any level correction is made. Individual spots where levels deviate by more than the H max tolerance of 20 mm shall be repaired as agreed to by the Engineer to bring the levels within the H90 tolerance.

The levels shall be taken in a random pattern or as directed by the Engineer, before and after the concrete layer has been constructed, at exactly the same positions. The number of measurements representing the lot shall be a minimum of 30 or more.

(ii) Layer thickness

Layer thickness shall be established from the difference in actual levels as measured before and after the concrete layer has be constructed as described in Clause A6.1.8c)(i) above. In addition to the thickness from levels, the Engineer can request for cores from the lot where the average of 4 measurements per core will be reported for thickness at the position of the core.

The layer shall comply with the requirements specified if at least 90 % of the thickness measured for the lot:

- are equal to or thicker than the specified thickness minus the D90 tolerance of 14 mm
- the mean layer thickness for the lot is not less than the specified thickness minus the Dave tolerance of 1,0 mm and
- individual spots where the thickness is less than the specified thickness minus the Dmax tolerance of 18 mm be repaired as agreed to by the Engineer to bring them within the D90 tolerance.

Section 6.1 Part A Specifications

A6.1.8 WORKMANSHIP

c) Construction tolerances

*(iii)*Grade

Deviations from the specified longitudinal grade on account of deviations from the specified levels shall not exceed those relevant requirements given in Chapter 5.

(iv) Width of pavement

The average width shall be at least equal to the specified width and the edge of the pavement shall not deviate by more than 25 mm from the specified positions.

(v) Joints

Joints shall not deviate by more than 10 mm from their specified positions in the pavement or by more than 10 mm from the edge of a 3,0 m straight-edge placed so as to touch the line of the joint. Neither shall the line of a joint be discontinuous. The tolerance for the groove width of sawn joints shall be as follows:

- Longitudinal hinge joints ± 0,5 mm
- Transverse contraction joints ± 0,5 mm

(vi) Cross section

When tested with a 3,0 m straight-edge placed at right angles to the road centre line, the surface shall not deviate from the bottom of the straight-edge by more than 6,0 mm.

Section 6.1 Part A Specifications

A6.1.8 WORKMANSHIP

c) Construction tolerances

(vii) Surface regularity

Surface regularity or roughness can be measured using one or a combination of instruments, as specified in the Contract Documentation viz:

- Inertial High speed profilometers (IRI)
- Direct Contact Devices (IRI)
- Rolling straight edge

1. Inertial Profiler

The operations and calculations in Average 100 meter IRI values for three runs are in accordance with Clause A20.1.5.5c)(ii) of Chapter 20.The assessment of the data for compliance shall be in accordance with Clause A9.1.8.4 of Chapter 9.

2. Direct Contact Device

The operations and calculations in Average 100m IRI values shall be in accordance with Clause A20.1.5.5(c)(i) of Chapter 20. The assessment of the data for compliance is in accordance with Clause A9.1.8.4 of Chapter 9.

3. Rolling Straight Edge

The equipment is operated and calibrated in accordance with method ST3 of TMH6.The number of irregularities in excess of a setting of 3,0 mm shall not exceed 8 over 100 m sections and not exceed an average number of 5 per 100 m taken over 300 – 600 meter sections. Any individual irregularity when measured with the rolling straight edge or a 3,0 m straight edge when laid parallel to the road centre line shall not exceed 7,0 mm.

Section 6.1 Part A Specifications

A6.1.8 WORKMANSHIP

c) Construction tolerances

(viii) Dowels

Dowels shall be positioned at the depth specified, measured from the surface level of the slab, within a tolerance of ± 10 mm. They shall be aligned parallel to the finished surface of the slab, to the centreline of the carriageway and to each other within the following tolerances:

1. Dowels supported on cradles, prior to construction of the slab:

All dowels in a joint shall be within ± 2,0 mm per 300 mm length of bar. No individual dowel shall differ in alignment from an adjoining bar by more than 3,0 mm per 300 mm length of bar in either the horizontal or vertical planes.

2. Dowels supported on cradles or mechanically installed, after construction of the slab.

Dowels in a joint shall be within ± 2,0 mm per 300 mm length of bar. No individual dowel shall differ in alignment from an adjoining bar by more than 6,0 mm per 300 mm length of bar in either the horizontal or vertical planes.

3. All dowels shall be equally positioned about the intended line of the joint within a tolerance of ± 25 mm.

4. Random checks of the dowels positioning shall be ordered by the Engineer by taking cores at the position of the bar ends. The coring shall be measured and paid for separately.

Questions?

Section 6.1 Part B Labour Enhancement

ONLY DIFFERENCES FROM 6.1 PART A HIGHLIGHTED

B6.1.4.2 Design requirements

All the requirements as specified in Clause A6.1.4.2 shall be applicable with the exception that the mix proportions and consistency of the concrete mix shall be such that, with the methods and equipment in use, the concrete can be adequately transported, discharged, spread and fully consolidated without excessive bleeding or segregation of the components. The concrete consistency shall be appropriate to the type of paving equipment used, the haul, the weather and the site conditions.

B6.1.5.1 Cementitious materials

All the requirements specified in Clause A6.1.5 shall apply. The cementitious materials incorporated in the mix shall, however, be such that, dependant on the production rates achieved, the concrete shall have sufficient time to be transported, placed consolidated and finished prior to initial setting occurring.

B6.1.6.2 Concrete batching plant

Where concrete is batched on site it must comply with the requirements of SANS 50206 (SANS 878). The Contractor shall have full responsibility to implement process control testing in accordance with the specifications.

Section 6.1 Part B Labour Enhancement

B6.1.6 CONSTRUCTION EQUIPMENT

B6.1.6.3 Paving

a) Side forms

Before any side-forms may be ordered or brought onto the site, particulars regarding the side-forms shall have been approved by the Engineer. Side-forms and rails shall be so designed, manufactured, set and supported that the completed concrete pavement will comply with all the requirements of Clause A6.1.8. When assessed with a 3,0 m straight-edge, the top edge of the form shall not deviate by more than 3,0 mm at any place, and the sides by more not than 6,0 mm. The sides shall not deviate by more than 3,0 mm from the vertical. The height of the side-forms shall not be less than the nominal thickness of the concrete slab less 15 mm.

Section 6.1 Part B Labour Enhancement

B6.1.6 CONSTRUCTION EQUIPMENT

B6.1.6.3 Paving

b) Paving equipment

The paving equipment is not prescribed but the Contractor shall utilise appropriate hand operated equipment and construction methods in order to achieve the desired final product as specified. The Contractor shall provide a comprehensive method statement and quality plan to the Engineer for approval prior to commencing with any such work.

Section 6.1 Part B Labour Enhancement

B6.1.6 CONSTRUCTION EQUIPMENT

b) Paving equipment

Section 6.1 Part B Labour Enhancement

B6.1.6 CONSTRUCTION EQUIPMENT

B6.1.6.5 Burlap drag equipment

The burlap drag shall be either attached to a suitable apparatus running on the side forms as prescribed in Clause A6.1.6.5, or fixed to a sufficiently rigid rod capable of being dragged across the full width of the pavement by labour located on either side of the side forms. When not in use, the entire drag shall be lifted clear off the pavement.

The dimensions of the burlap drag shall be such that at least 1,0 m of the material is in contact with the surface of the concrete pavement measured in the direction in which the drag is being moved. The burlap drag shall consist of at least two layers of approximately 340 g/m2 burlap with the bottom layer at least 150 mm longer than the top layer at the dragging end. However, if the required texture is not obtained then, at the discretion of the Engineer, the number of layers may be increased to four. The transverse threads of the trailing 150 mm to 300 mm of the burlap drag shall be removed.

Section 6.1 Part B Labour Enhancement

B6.1.6 CONSTRUCTION EQUIPMENT

B6.1.6.5 Burlap drag equipment

Section 6.1 Part B Labour Enhancement

B6.1.6 CONSTRUCTION EQUIPMENT

B6.1.6.6 Texture grooving equipment

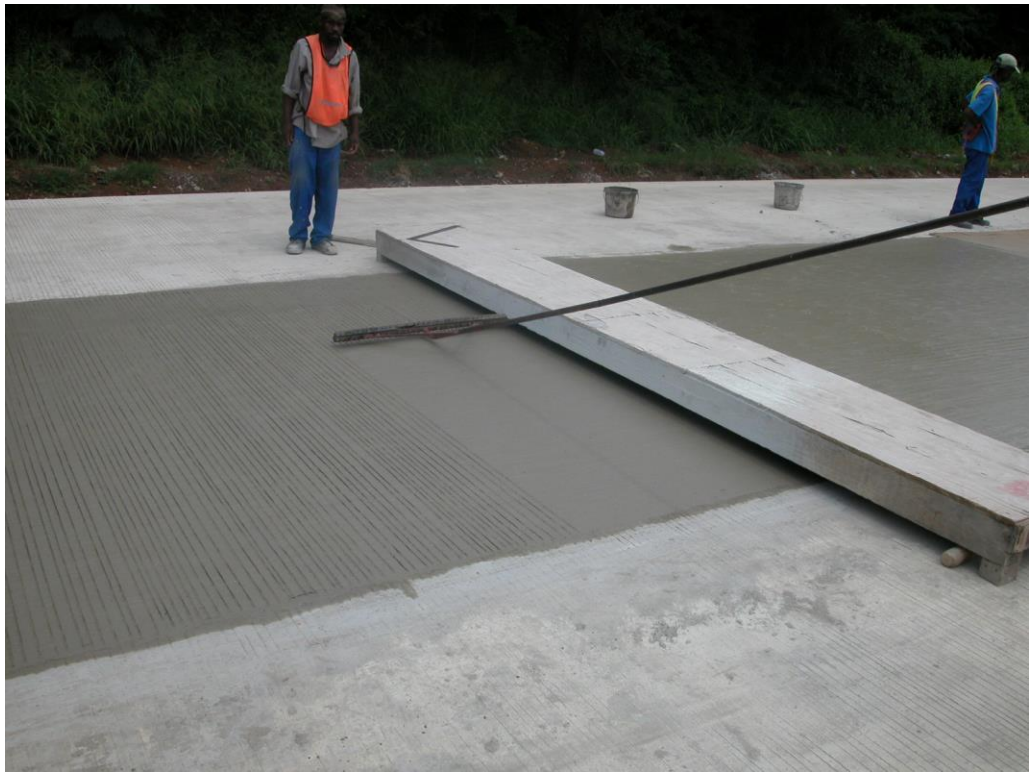

Section 6.1 Part B Labour Enhancement

B6.1.6 CONSTRUCTION EQUIPMENT

B6.1.6.7 Applicator for curing compound membrane

Hand operated power-spray equipment may be used to apply specified curing compound.

Section 6.1 Part B Labour Enhancement

B6.1.7 EXECUTION OF THE WORKS

B6.1.7.3 Placing, Compacting and Finishing Concrete

a) General

All the requirements as listed in Clause A6.1.7.3 shall be applicable, with the following are additional requirements.

b) Placing of concrete

Where concrete is delivered from the side of the pavement by means of transit mixes, the distribution from the chute shall be such that lateral movement of the concrete by labour shall be as minimal as possible in order to prevent segregation occurring.

Where concrete is delivered in tipper trucks ahead of the paving operation, the rate and manner of tipping shall be such as to prevent a height of greater than 500 mm in the deposited pile having to be redistributed by hand.

c) Fixing of steel

Where the concrete is to be spread and initially levelled by hand, the type and spacing of supporting spacer blocks/stools, and installation detail of any tie bars, dowels, continuous reinforcing steel or steel mesh shall be such that their final position shall not deviate from specified location tolerances, as specified, during placement and distribution by labour based methods. The method to ensure this shall be approved by the Engineer.

.

Section 6.1 Part B Labour Enhancement

B6.1.7 EXECUTION OF THE WORKS

B6.1.7.3 Placing, Compacting and Finishing Concrete

d) Texturing and curing

Sufficient gang planks of appropriate rigidity shall be supplied to enable the workman to access the centre of the pavement in order to complete the texturing and application of curing compound without disturbing the burlap finished surface.

In order to ensure straight grooves the comb shall be operated against a straight-edge placed at right angles to the pavement centre line. The same requirements regarding groove dimensions or texture depth as for machine-texturing shall apply.

B6.1.7.4 Joint forming

B6.1.8 WORKMANSHIP

Unless otherwise specifically stated in the Contract Documentation, all the requirements specified in Clause A6.1.8 shall be applicable.

Section 6.1 Part B Labour Enhancement

B6.1.8 WORKMANSHIP

Unless otherwise specifically stated in the Contract Documentation, all the requirements specified in Clause A6.1.8 shall be applicable.

Questions?

Section 6.1 Part C Measurement and Payment

- **Mostly similar to COLTO**
- **New Item**
  - Loading and hauling C6.1 C1.7 of Chapter 1 - All applicable
- Broken down by pavement type and paver laid or labour enhanced

- Query
- **C6.1.8 Drilling of testing of cores**
- C6.1.8.1 100 mm cores drilled from pavement for testing of compressive strength number (No)
- C6.1.8.2 150 mm cores drilled from pavement for testing of compressive strength number (No)

- No Acceptance criteria

Section 6.1 Part D Guarantees and Compliance Certificates

- **Only applies to joint sealant**

Chapter 6

- Section 6.2 Segmental Block Paving Layers
- Part A Specifications
  - A6.2.1 Scope
  - A6.2.2 Definitions
  - A6.2.3 General
  - A6.2.4 Design by Contractor/Performance Based Systems
  - A6.2.5 Materials
  - A6.2.6 Construction Equipment
  - A6.2.7 Execution of the Works
  - A6.2.8 Workmanship

Section 6.2 Part A Specifications

A6.2.1 SCOPE

This Section covers the furnishing of materials and the construction of segmental block paving for roads.

A6.2.2 DEFINITIONS

Segmental block paving – a system of individual shaped blocks arranged to form a continuous hard-wearing and durable surface overlay.

A6.2.3 GENERAL

Not applicable to this Section.

A6.2.4 DESIGN BY CONTRACTOR / PERFORMANCE BASED SYSTEMS

Where it is specified in the Contract Documentation that the blocks shall be manufactured in a dedicated on-site facility by the Contractor, all the requirements as listed in SANS 1058 for the specific class of block specified shall be applicable.

Section 6.2 Part A Specifications

A6.2.5 MATERIALS

This Section covers the furnishing of materials and the construction of segmental block paving for roads.

A6.2.5.1 Paving blocks

Concrete paving blocks shall comply with the requirements of SABS 1058. The block shall be of the class, type and thickness specified in the Contract Documentation. The surface texture and colour of all blocks shall be uniform. *Should specify SABS or CMS mark*

A6.2.5.2 Bedding sand

Bedding sand shall not contain any silt, clay or other deleterious impurities. The sand shall comply with the following grading requirements in Table A6.2.5-1.

Table A6.2.5-1: Grading requirements for bedding sand

Sieve size	Percentage passing by mass
7.1	100
5.0	95 – 100
2.0	80 – 100
1.0	50 – 85
0.6	25 – 60
0.3	10 – 30
0.15	5 – 15
0.075	0 - 10

Section 6.2 Part A Specifications

A6.2.5 MATERIALS

A6.2.5.3 Jointing sand

100 % of the sand used to fill the joints between the concrete blocks shall pass through a 1,0 mm sieve and between 10 % and 15 % of it shall pass through a 0,075 mm sieve.

A6.2.5.4 Concrete beams, kerbs and channelling

Cast in situ concrete edge beams or intermediate beams shall be constructed in accordance with the provisions of Chapter 13: Structures, as relevant. Prefabricated kerbing and channelling shall comply with the requirements of Section A3.3 or Section B3.3 of Chapter 3 as specified in the Contract Documentation.

A6.2.5.5 Herbicide and ant poison

The herbicide and ant poison shall be environmentally friendly and shall be subject to the Engineer's approval.

Section 6.2 Part A Specifications

A6.2.6 CONSTRUCTION EQUIPMENT

A suitable vibrating-plate compactor shall be supplied operating at a frequency of 65 Hz to 100 Hz and a low amplitude. Its plate surface shall be 0,2 m^2 to 0,4 m^2 and it shall develop a centrifugal force of 7 kN to 16 kN..

A6.2.7 EXECUTION OF THE WORKS

A6.2.7.1 Preparing the underlying layers

The underlying pavement layer/s shall be as specified in the Contract Documentation. The underlying pavement layers shall be constructed and prepared in accordance with the requirements for the relevant pavement layers in Chapters 4 and 5 of these specifications, or as may be specifically otherwise prescribed in the Contract Documentation. Where specified by the Engineer the prepared surface shall be treated with approved herbicide and ant poison before the layer of sand for bedding is placed.

A6.2.7.2 Concrete edge and intermediate beams

Cast in situ or prefabricated concrete edge beams or intermediate beams shall be constructed on the underlying pavement layer in accordance with the details shown on the drawings. No paving blocks shall be laid before the edge and intermediate beams have developed sufficient strength to withstand the construction forces.

Section 6.2 Part A Specifications

A6.2.7 EXECUTION OF THE WORKS

A6.2.7.3 Bedding sand

A layer of bedding sand complying with the requirements of Clause A6.2.5.2 shall be placed on top of the prepared surface of the underlying pavement layer. It shall be accurately levelled to an un-compacted thickness of 25 mm (± 5,0 mm), or as specified, so that the concrete paving blocks will have the correct level after compaction. The bedding sand shall be placed immediately before the concrete paving blocks are laid and shall be allowed to dry out to permit upward creep during compaction. The sand shall not be compacted before the blocks have been laid.

Section 6.2 Part A Specifications

A6.2.7 EXECUTION OF THE WORKS

A6.2.7.4 Laying of the blocks

The blocks shall be laid in the pattern shown on the drawings or as directed by the Engineer. Unbroken blocks shall be laid first and the filler pieces afterwards. Filler pieces shall be neatly sawn or hewn to fit exactly into the space to be filled. Any space of which the size is less than 25 % of the size of an unbroken block, shall be filled with 35 MPa concrete. The size of the joints between blocks shall be between 2,0 mm and 4,0 mm, and the top faces of the blocks shall be flush.

After the paving blocks have been laid, the pavement shall be compacted by two passes of a suitable vibrating-plate compactor operating at a frequency of 65 Hz to 100 Hz and a low amplitude.

After compaction of the pavement as described above, jointing sand shall be spread and brushed into the joints until the joints have been properly filled. Any surplus sand shall then be broomed off and the pavement shall then be subjected to two further passes by the plate vibrator. Jointing sand shall not be hosed into the joints. The block paving shall be inspected after 2 months, and the joints shall be resanded where required.

Section 6.2 Part A Specifications

A6.2.8 WORKMANSHIP

A6.2.8.1 Construction tolerances

The completed concrete block paving shall comply with the following construction tolerances:

a) Line of pattern

(i) Maximum deviation from a 3,0 m straight edge: 3,0 mm

(ii) Maximum deviation from a 20 m straight line: 10 mm

b) Vertical deviation from a 3,0 m straight edge

(i) At the edge beams: 3,0 mm

(ii) Elsewhere: 3,0 mm

c) Differences in the surface levels of adjacent units: 2,0 mm

Section 6.2 Part B Labour Enhancement

ALL CLAUSES STATE

The provisions of Part A shall apply

Section 6.2 Part C Measurement and Payment

Includes same clause on hauling as Section 6.1

Other payment items as per COLTO

Item	Description	Unit
C6.2.4	**Re sanding of joints in segmental block paving**	
C6.2.4.1	Concrete block paving (indicate class, type and thickness of blocks)	square metre (m^2)

The unit of measurement shall be the square metre of completed concrete block paving where re-sanding (filling) of the jointing sand is required after initial completion of the work. The quantity shall be calculated from the dimensions shown on the drawings or authorised by the Engineer. The tendered rate shall include full compensation for furnishing all materials to refill the joints with jointing sand where required.

Section 6.2 Part D Guarantees and Compliance Certificates

- **No specific items in this Section.**
- **Where applicable, details must be provided in the Contract Documentation.**

Questions?

Thank you