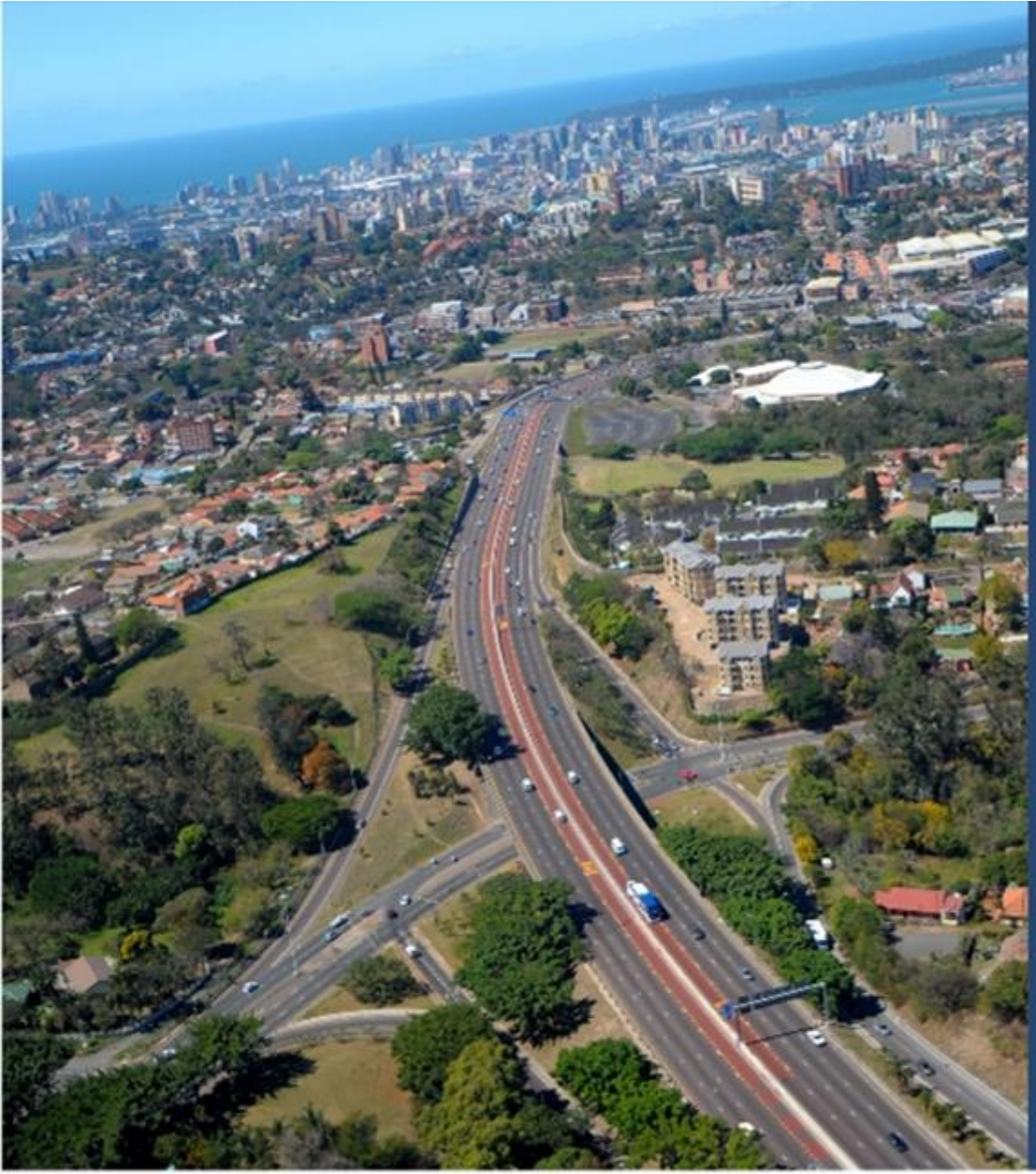

SARF

better roads

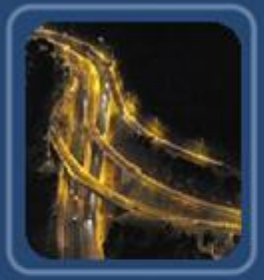

South African Road Federation

Maintenance and Repair of Concrete Pavements

Bryan Perrie

Cement & Concrete – SA

bryan.perrie@cemcon-sa.org.za

083 309 4260 / 011 315 0300

COTO Content

Chapters (15)	Sections (90)
1. General	7
2. Services	4
3. Drainage	3
4. Earthworks and Pavement layers: Materials	5
5. Earthworks and Pavement layers: Construction	5
6. Concrete Layers	2
7. Maintenance and Repair of Concrete Layers	6
8. Pretreatment and Repair Existing Layers	9
9. Asphalt Layers	1
10. Surface Treatments	1
11. Ancillary Works	9
12. Geotechnical Applications	12
13. Structures	14
14. Repair and Rehabilitation of Structures	11
20. Quality Assurance	1

Chapter 7 Background

- Existing COLTO has some detail on remedial work in Section 7125
  - Removing concrete
  - Removing high spots
  - Repairing joints
  - Repairing cracks
  - Rehabilitation of concrete pavements
    - Removal
    - Placing new concrete
    - Surface texture
    - Joints
    - Repairing joints and cracks
    - Retexturing

All in one and a half pages

Chapter 7

- Chapter 7 has six Sections viz;
  - 7.1 Replacement of Existing Joint Sealant
  - 7.2 Repairs to Existing Joints and Uncontrolled Cracks in Concrete Pavements
  - 7.3 Removal and Replacement of Existing Concrete Layers
  - 7.4 Reinstatement of Slab Support by Grout Injection
  - 7.5 Reinstatement of Riding Quality
  - 7.6 Reinstatement of Surface Texture

32 pages

Chapter 7

- Each of the Sections has 4 parts viz;
  - Part A: Specifications
  - Part B: Labour Enhancement
  - Part C: Measurement and Payment
  - Part D: Guarantees and Compliance Certificates

Chapter 7

- Each Part of each Section has 8 basic clauses, namely
  - Scope
  - Definitions
  - General
  - Design by Contractor/Performance Based Systems
  - Materials
  - Construction Equipment
  - Execution of the Works
  - Workmanship

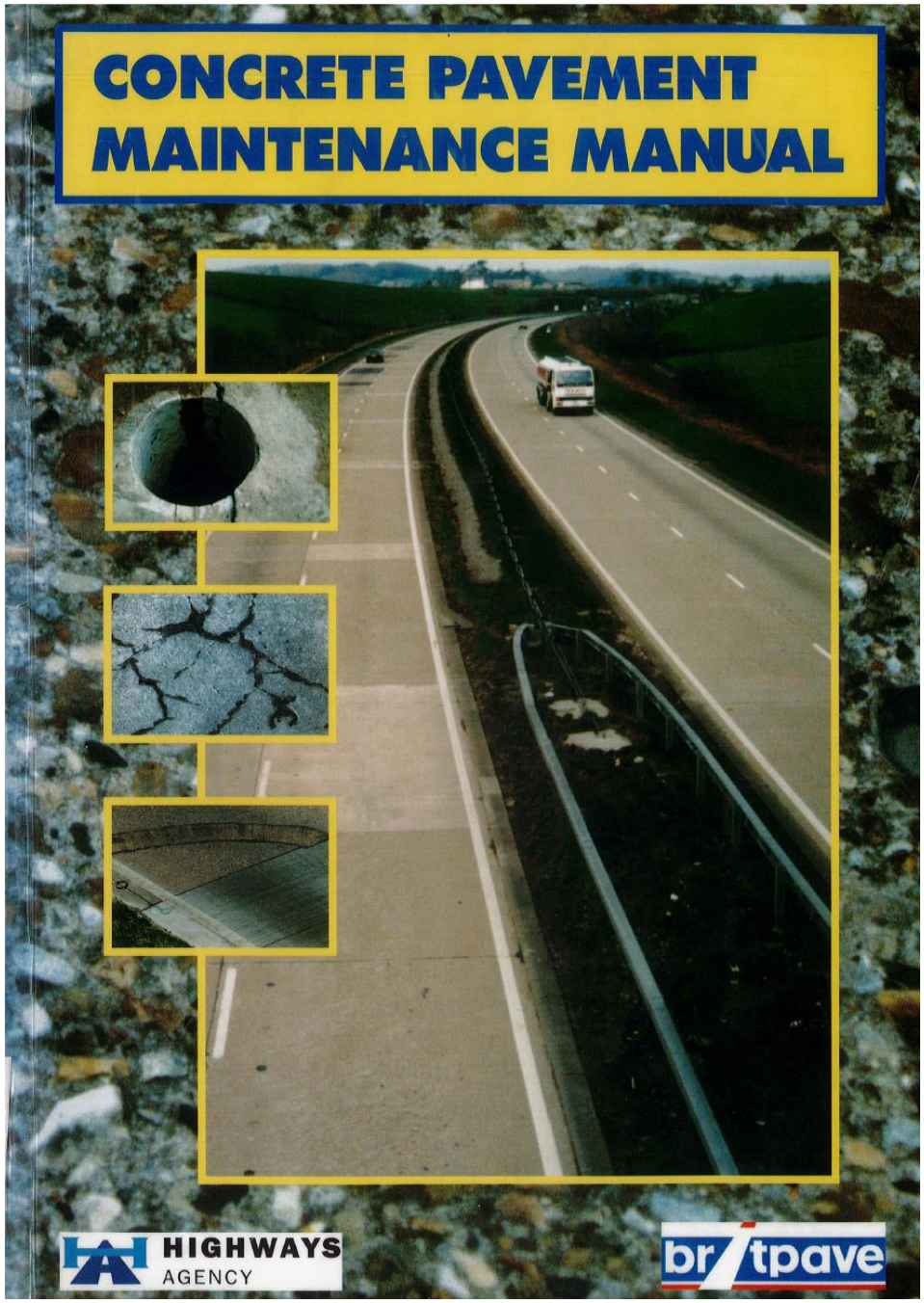

SARF
better roads

CEMENT &
CONCRETE SA

National Concrete Pavement Technology Center

September 2014

Second Edition

CONCRETE PAVEMENT PRESERVATION GUIDE

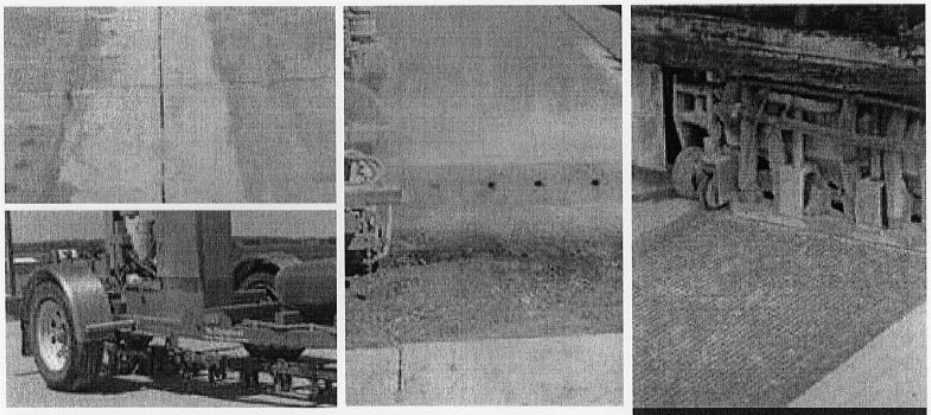

U.S. Department of Transportation
Federal Highway Administration

FHWA Publication No. FHWA-HIF-14-014

00/07086
F/N512·7 MIL

A Manual for the Maintenance and Repair of Concrete Roads

H S Mildenhall MICE MIHT
G D S Northcott BSc MICE FIHT

Department of Transport
Cement & Concrete Association
C&CI LIBRARY
06073
Her Majesty's Stationery Office

PORTLAND CEMENT INSTITUTE
LIBRARY
P.O. Box 186 Halfway House 1685

Chapter 7

Section 7.1 Replacement of Existing Joint Sealant

Section 7.1 Part A Specifications

A7.1.1 SCOPE

This Section covers work related to:

- The removal and replacement of existing joint sealants in concrete pavements where no repairs to the adjacent concrete is required.

- Joint sealant installed under a Performance Based System with extended warranties is covered under Part D of this Chapter.

A7.1.2 DEFINITIONS

Types of joints and associated pavement distress - as defined in the latest version of TMH9: Standard Visual Assessment Manual, Part C: Concrete Pavements.

Joint Seal Condition

Section 7.1 Part A Specifications

A7.1.3 GENERAL

The Contractor shall submit a complete method statement for approval by the Engineer before the resealing of any joints commences. The Engineer will have 5 days to study and comment on the method statement before approval shall be given.

A7.1.4 DESIGN BY CONTRACTOR / PERFORMANCE BASED SYSTEMS

A7.1.5 MATERIALS

A7.1.5.1 Sealant

The joint sealant shall be a cold poured self- levelling liquid silicone sealant conforming to the requirements as prescribed in Clause A6.1.5.7 of Chapter 6 for the particular type of sealant specified.

Section 7.1 Part A Specifications

A7.1.6 CONSTRUCTION EQUIPMENT

A7.1.7 EXECUTION OF THE WORKS

A7.1.7.1 Removal of existing seals, reaming of joint and resealing

The reaming and sealing of existing joints shall be undertaken in accordance with Clause A6.1.7.5. In addition, this treatment is applicable where existing joints are only slightly spalled and no treatment of the adjacent concrete is required.

1. Remove sealant and backing cord
2. Ream joints to prescribed dimensions
3. High-pressure water cleaning
4. Before backing cord is installed, clean with oil-free compressed air
5. Apply primer if required
6. Instal backing cord using rolling tool

Section 7.1 Part A Specifications

A7.1.7.1 Removal of existing seals, reaming of joint and resealing

7. Apply sealant with suitable pneumatically driven pump.
8. Work to compact and depress or use an approved nozzle with finishing apparatus
9. Further directions supplied by the manufacturer shall be strictly complied with, particularly with regard to temperatures for application, opening to traffic, and safety aspects.
10. No traffic shall be permitted to pass over a sealed joint before the sealant is able to withstand the penetration of foreign matter.
11. No spillage
12. No sections of pavement shall be left unsealed while being trafficked.

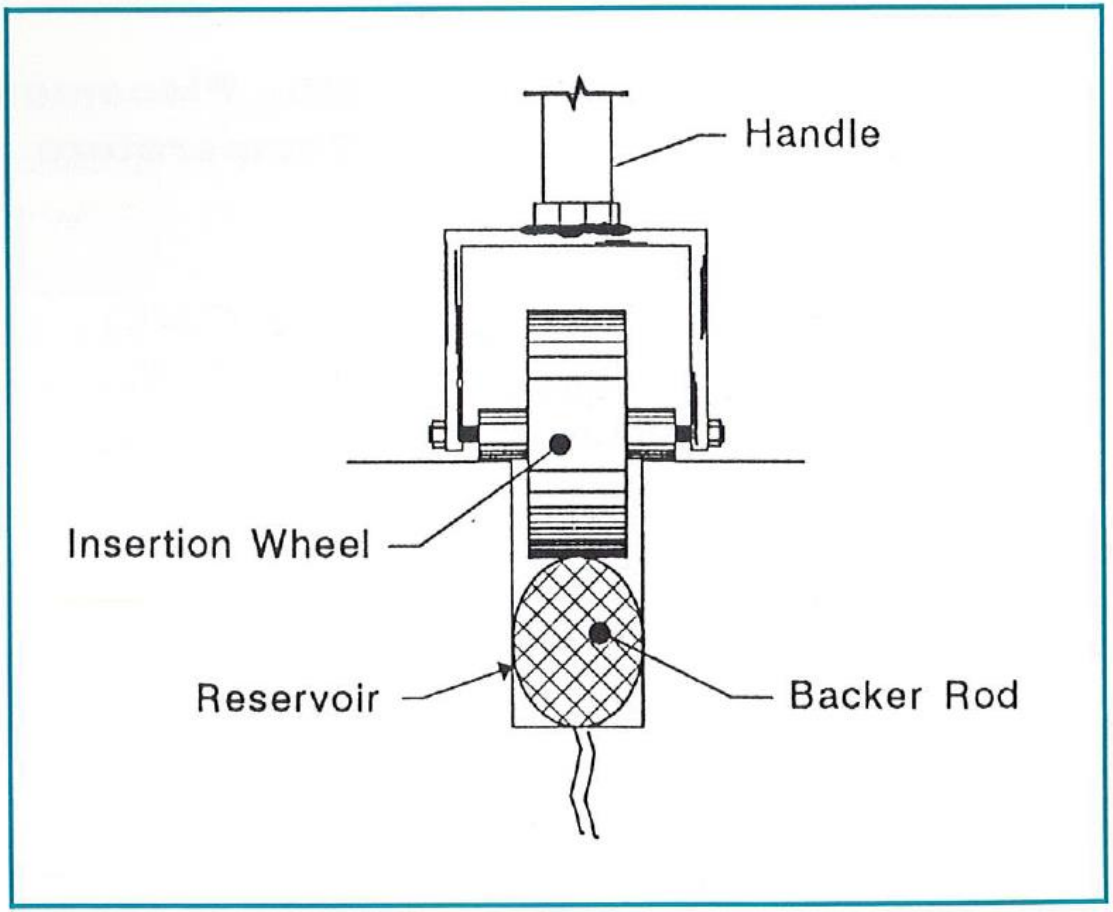

Figure 15 *A double-wheeled, steel roller for backer rod insertion to the desired depth.*

Section 7.1 Part A Specifications

A7.1.7.2 Bevelling of spalled edges and resealing

This treatment shall apply to joints spalled to degrees of medium and high severity as defined in TMH 9. The edges of the joints shall then be bevelled by means of a mechanical device to dimensions of 10 mm, 15 mm or 20 mm (dependant on the depth of the spall) at a 45° angle before the installation of the liquid sealant

A7.1.8 WORKMANSHIP

A7.1.8.1 Groove width

After reaming, the width and depth of the groove shall be ± 0,5 mm of that width specified in the Contract Documentation.

A7.1.8.1 Sealant depth

The top surface of the sealant shall not be less than 5,0 mm and not more than 7,0 mm below the paved surface.

Section 7.1 Part B Labour Enhancement

All provisions of Part A apply

Section 7.1 Part C Measurement and Payment

Item	Description	Unit
C7.1.1	**Replacing of joint sealant in existing concrete pavement as follows:**	
C7.1.1.1	Removal of existing seal and backing material	metre (m)
C7.1.1.2	Reaming of existing joints (indicate width and depth)	metre (m)
C7.1.1.3	Bevelling of one side of the joint to a dimension of 10 mm X 10 mm	metre (m)
C7.1.1.4	Bevelling of both sides of the joint to a dimension of 10 mm X 10 mm	metre (m)
C7.1.1.5	Installation of backing material in saw cut joints (to fit saw cut dimensions)	metre (m)
C7.1.1.6	Installation of cold pour sealant	litre (ℓ)

Section 7.1 Part D Guarantees and Compliance

Very detailed section on PPGS

6 pages

Questions?

Chapter 7

Section 7.2 Repair To Existing Joints And Uncontrolled Cracks In Concrete Pavements

Section 7.2 Part A Specifications

A7.2.1 SCOPE

This Section covers work related to the repair of pavements across isolated uncontrolled cracks as well as repair of existing joints in concrete pavements in the following instances:

- may also require the retro-fitting of tie-bars and/or dowel bars
- area of repair shall be limited to only a portion of a panel adjacent to a joint

A7.2.2 DEFINITIONS

- **Concrete Pavement Types** - as defined in Clause A6.1.2.
- **Joint types** – All types
- **Uncontrolled Cracking** - as defined in TMH 9: Part C.

Random Cracking

Transverse Cracking

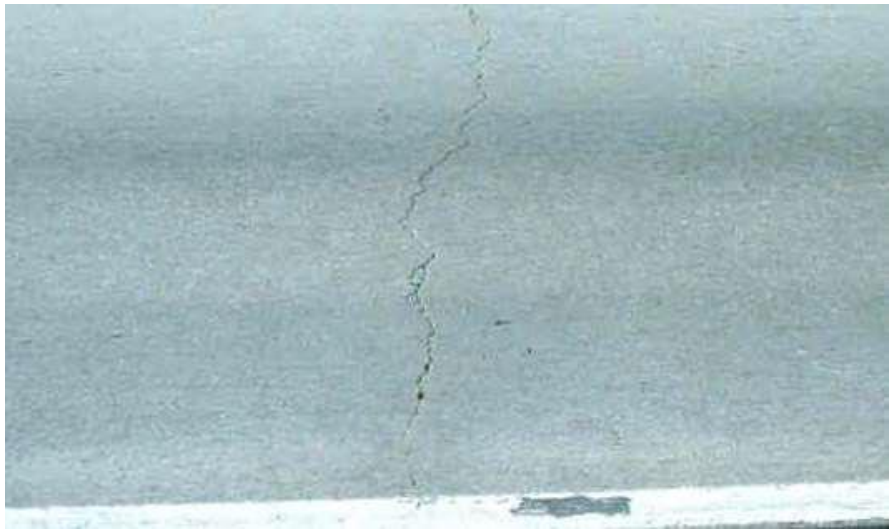

Longitudinal Cracking

Corner Cracking

Cluster Cracking CRCP

Section 7.2 Part A Specifications

A7.2.3 GENERAL

The Contractor shall submit a complete method statement setting out methodology for all operations

A7.2.4 DESIGN BY CONTRACTOR / PERFORMANCE BASED SYSTEMS

Section 7.2 Part A Specifications

A7.2.5 MATERIALS

A7.2.5.1 Aggregates

A7.2.5.3 Cement

CEM class 52,5 R in conjunction with an accelerator if required, but only if approved.

A7.2.5.4 Epoxy and repair products

- A semi-fluid epoxy adhesive paste for the bonding of new concrete to existing concrete (wet to dry).
- A polyamide cured thixotropic epoxy adhesive paste for bonding tie bars to existing concrete and small epoxy repairs
- High strength concrete for partial depth repairs, filling tie bar and dowel slots as well as grout holes
- An epoxy for filling saw cuts
- A cementitious non-shrink grout for filling of wide joints
- A self-levelling pourable epoxy grout for use in cross stitching
- A low viscosity pourable epoxy for use in crack injection

The use of epoxy grout to repair spalling along transverse or longitudinal joints shall not b permitted.

Section 7.2 Part A Specifications

A7.2.5 MATERIALS

A7.2.5.5 Bond breaking products

A bond breaking product as shown on the drawings shall be applied to existing concrete faces. Alternatively, Contractor's PVA paint or similar approved material applied at a nominal rate of 0,25 ℓ/m².

A7.2.5.6 Tie bars, dowels, continuous reinforcing steel and steel mesh

Chapter 6

Section 7.2 Part A Specifications

A7.2.7 EXECUTION OF THE WORKS

A7.2.7.1 Repairing joints and cracks

The use of epoxy grout to repair spalling along transverse or longitudinal joints shall not be permitted.

Preparation for sealing as per Section 7.1.

The following types of repair treatment shall be undertaken on existing joints/ cracks in the concrete pavement.

a) Type R1 Treatment: (Bevelling of spalled edges and resealing)
b) Type R2 Treatment: (Routing and bevelling of active cracks)
c) Type R3 Treatment: (Routing and bevelling of non- active cracks)
d) Type R4 Treatment: (Bevelling of forward slabs where faulting has occurred)
e) Type R5 Treatment: (Cross-stitching)
f) Type R6 Treatment: (Crack injection)
g) Type R7 Treatment: (Restoration of load transfer at transverse contraction joints)
h) R8 Treatment: (Forming and sealing of joints between asphalt surfacing and concrete pavements)

Section 7.2 Part A Specifications

A7.2.7 EXECUTION OF THE WORKS

A7.2.7.1 Repairing joints and cracks

The use of epoxy grout to repair spalling along transverse or longitudinal joints shall not be permitted.

Preparation for sealing as per Section 7.1.

The following types of repair treatment shall be undertaken on existing joints/ cracks in the concrete pavement.

a) Type R1 Treatment: (Bevelling of spalled edges and resealing)

This treatment shall apply to joints spalled to degrees of medium and high severity as defined in TMH 9. Existing seals shall be removed and the joints reamed out to produce clean-cut surfaces. The edges of the joints shall then be bevelled by means of a mechanical device to dimensions of 10 mm, 15 mm or 20 mm (dependant on the depth of the spall) at a 45° angle before the installation of the liquid sealant.

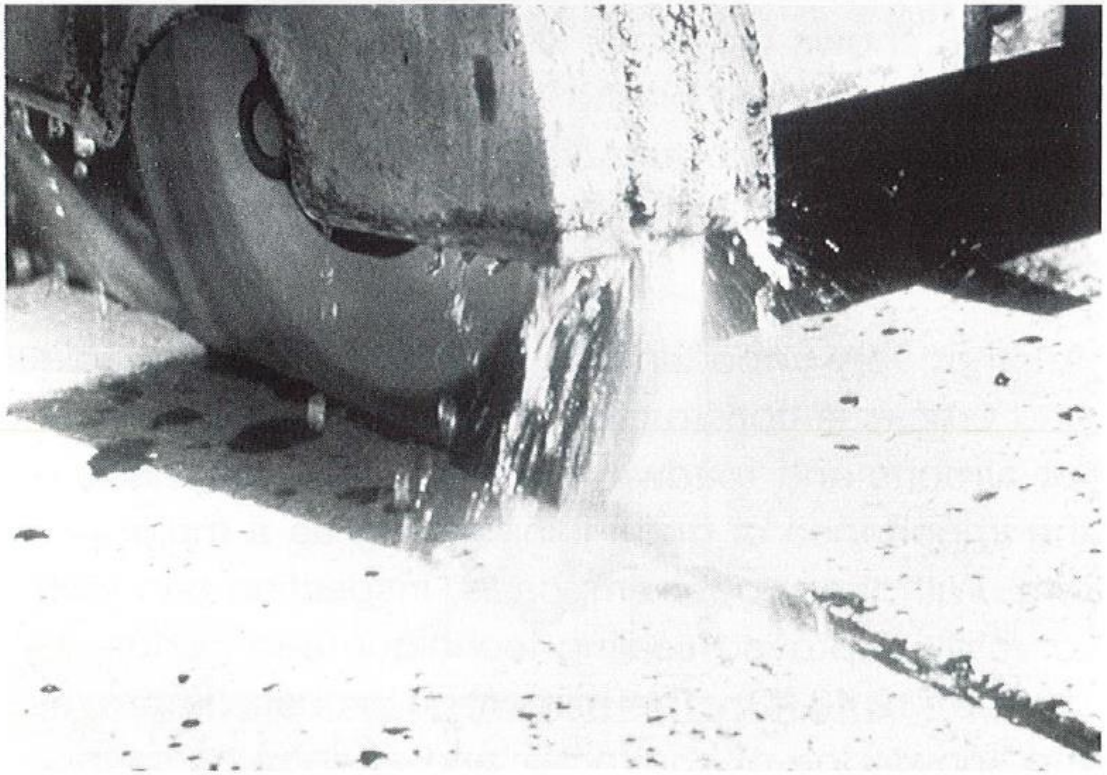

Figure 13 *Sawing/reshaping a sealant reservoir with a wet diamond blade.*

Section 7.2 Part A Specifications

A7.2.7.1 Repairing joints and cracks

b) Type R2 Treatment: (Routing and bevelling of active cracks)

This treatment shall be applicable where identified active transverse or longitudinal cracks are to be treated without the breaking up of the concrete slabs or portions thereof. This treatment shall entail the routing of cracks to the specified width and depth ratio as indicated on the drawings. Back-up material shall be placed at the bottom of the routed slot and the remainder of the slot then be filled with a cold-poured liquid sealant. The routing and bevelling shall be executed in such a way that the actual crack is always visible in the middle third of the width of the routed slot. This treatment may also be applicable to severely spalled transverse construction joints.

c) Type R3 Treatment: (Routing and bevelling of non- active cracks)

This treatment is similar to treatment type R1 above except that the routing shall be executed to a constant depth and width of 15 mm x 15 mm. The joint reservoir shall then be filled with a cold-poured liquid sealant. This treatment shall apply to smaller cracks or transverse construction joints which show a high degree of spalling.

d) Type R4 Treatment: (Bevelling of forward (*approach*) slabs where faulting has occurred)

This treatment applies at transverse joints where the approach slab is 5,0 mm or more higher than the leave slab and entails the removal of the existing seal, the bevelling of the higher edge (approach slab) and installing the new liquid sealant

Figure 27 *Crack sawing equipment. Note the small diameter blade and pivoting front wheel.*

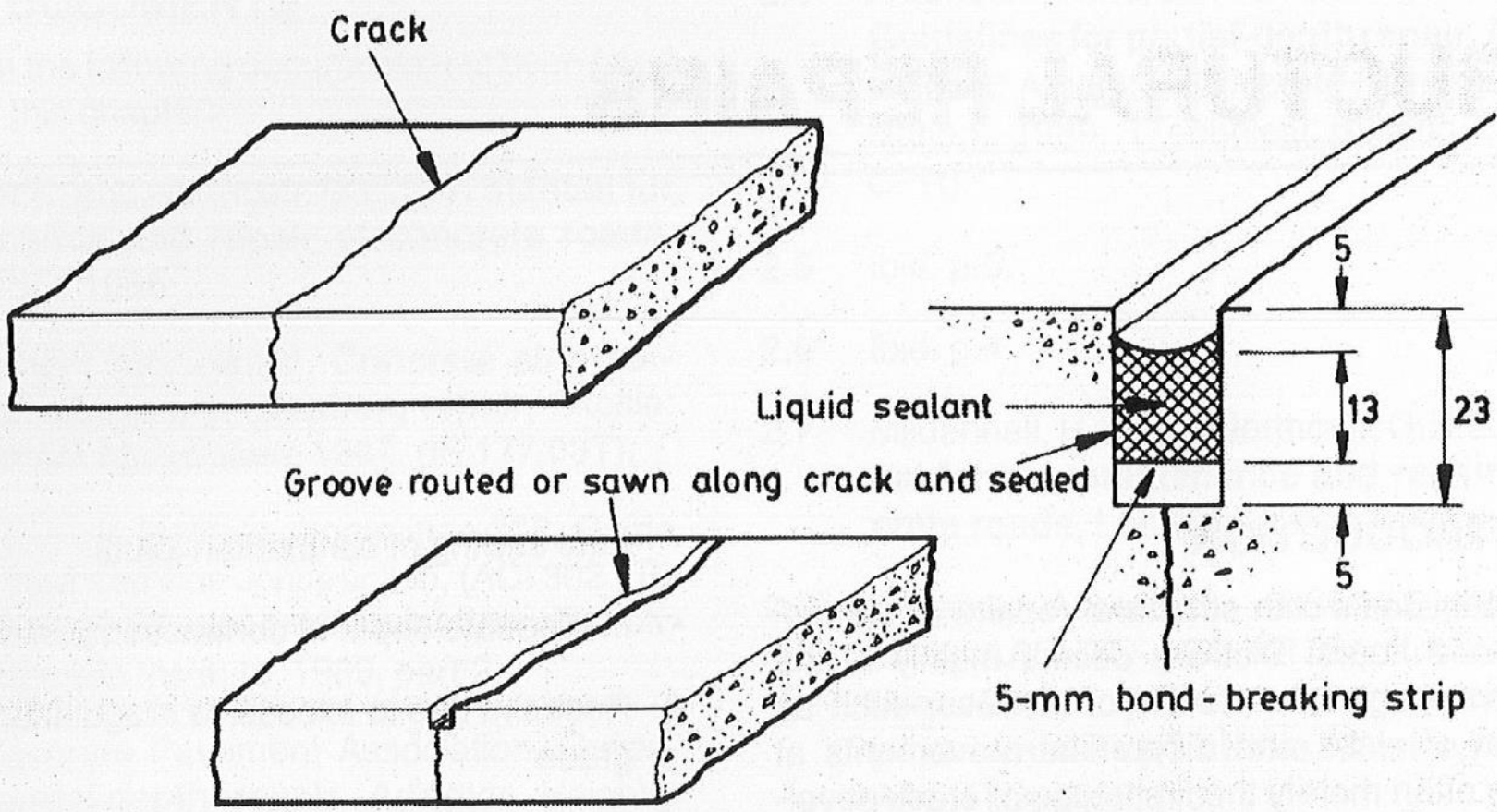

Figure 3.1: Forming and sealing a groove (adapted from reference 3.2)

Section 7.2 Part A Specifications

A7.2.7.1 Repairing joints and cracks

e) Type R5 Treatment: (Cross-stitching)

This treatment shall apply to longitudinal joints and cracks and shall be used to maintain load transfer and to provide added strength by preventing further movement of the joints/cracks.

Cross-stitching shall be carried out on active cracks before the application of a liquid sealant but after sub-sealing / slab-jacking if applicable. Longitudinal cracks which have assumed the role of an adjacent longitudinal joint (i.e. where movement takes place) shall not be cross-stitched. **VIP**

This operation involves the cutting of slots into the concrete pavement measuring ±1 000 mm x 50 mm x 175 mm using the smallest saw blade diameter possible. The slots shall be cut equidistant on either side of the crack and at right-angles to the longitudinal axis of the pavement. The slots shall be cleaned by means of water jetting and oil-free compressed air and a 16mm diameter reinforcing bar 760 mm long inserted in the bottom of the slot.

The bar shall then be covered with a self-levelling pourable epoxy grout followed by a layer of 7,1 mm crushed stone. The remainder of the slot is filled with a primer if specified by the manufacturer and followed with the provision of a high strength concrete Class 50/7 and finished-off level with the pavement surface. Excess material is removed and the surface is left in a clean condition.

Better Alternatives????

Figure 26 *Cross-stitching tiebars ready for final insertion on an airport pavement.*

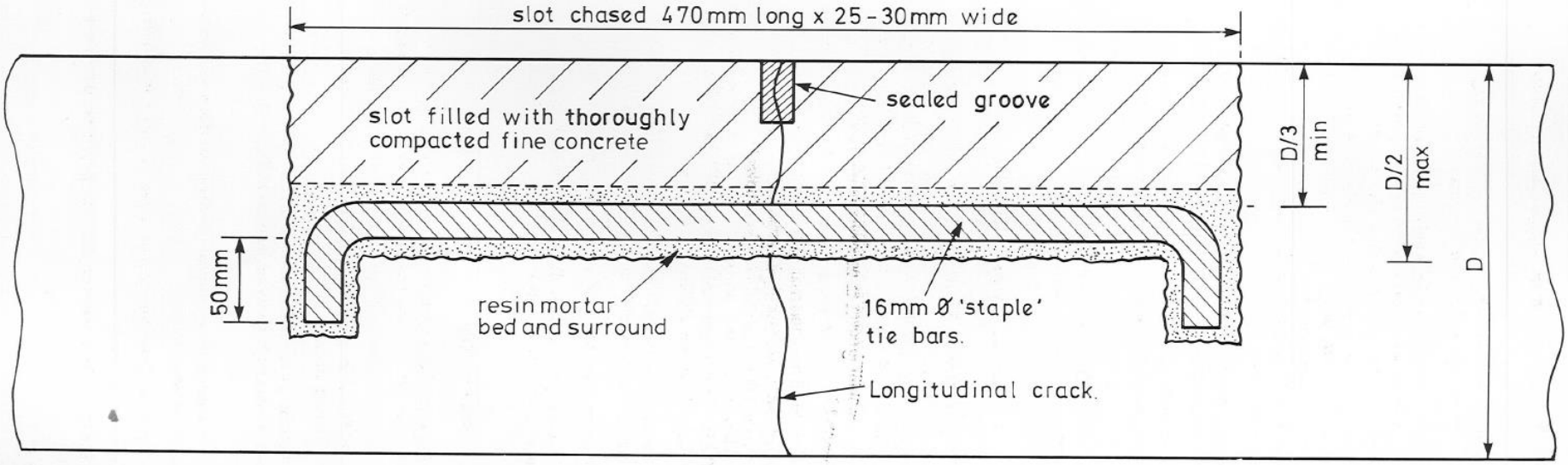

Figure 49 Stitched Repair Detail.

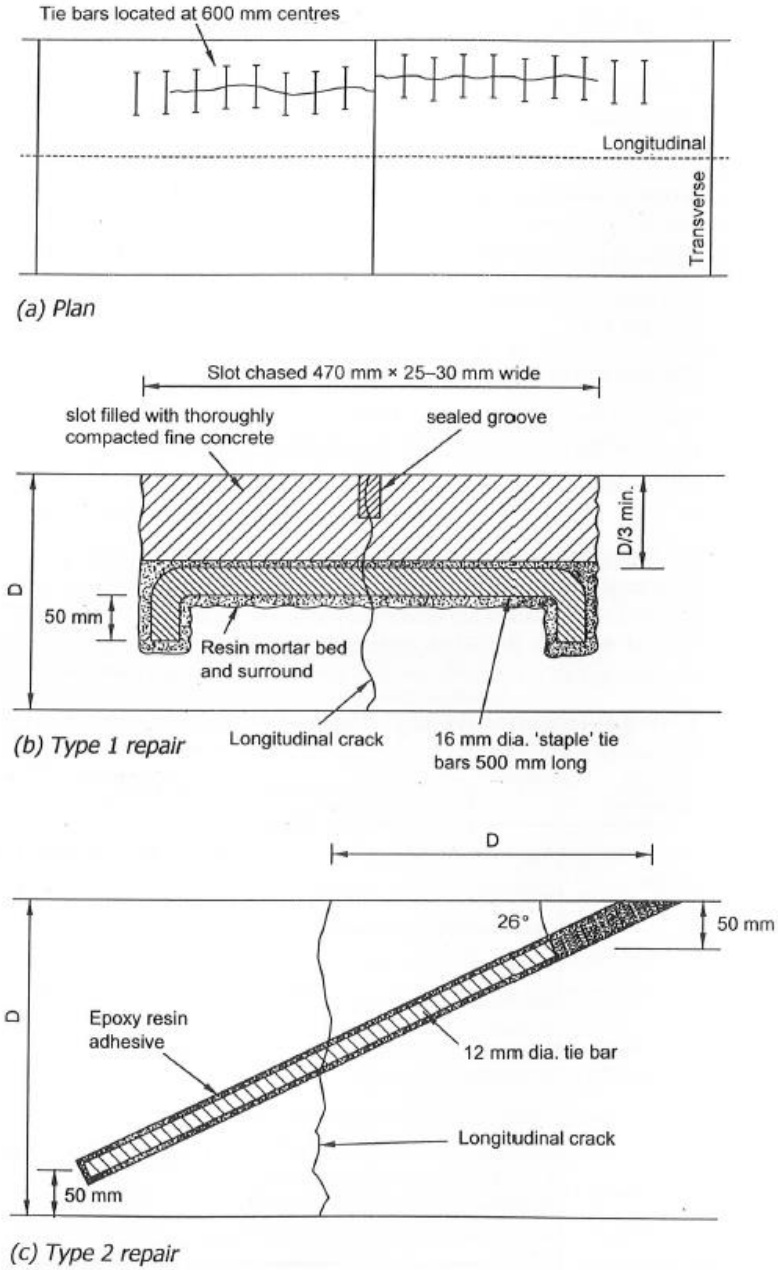

Figure 8.4: Stitched crack repairs.

Section 7.2 Part A Specifications

A7.2.7.1 Repairing joints and cracks

f) Type R6 Treatment: (Crack injection)

Crack injection treatment shall be used for the reinstatement of slab integrity on low-severity inactive longitudinal and transverse cracks. The crack shall be reamed out to a width and depth as indicated by the Engineer. Maximum width shall not exceed 12 mm and the maximum depth shall not to exceed 42 mm.

The reamed-out crack is then cleaned with a high pressure water jet, followed by the use of oil-free compressed air to remove any residual dirt. The surfaces shall be clean and dry before a low viscosity pourable epoxy is used under the manufacturer's recommendations to fill the crack. The epoxy shall be slowly gravity fed into the reservoir. Sufficient time is to elapse before the crack is topped up with resin to a final level not exceeding the bottom of the reservoir.

The resin should be allowed to cure for 24 hours before joint-sealing can take place.

Section 7.2 Part A Specifications

A7.2.7.1 Repairing joints and cracks

g) Type R7 Treatment: (Restoration of load transfer at transverse contraction joints)

This method of treatment is required at transverse joints where load transfer between adjacent slabs has deteriorated and resulted in pumping, faulting, corner breaks and spalling.

This work shall involve the installation of 32 mm diameter dowels placed at mid-depth in the concrete pavement by means of cutting slots 640 mm in length, 90 mm wide and 175 mm deep in the wheel path and across the existing transverse contraction joint. The sliding end of the dowels shall be treated with a bond-breaking compound to prevent the concrete from adhering to it. The slots shall be cleaned by means of water jetting and oil-free compressed air. Dowels fitted with end caps shall be inserted parallel to the longitudinal axis of the road and shall be placed on supports of non-shrink grout. The slots shall then be filled with a high strength concrete Class 50/7 and finished flush with the existing concrete pavement surface.

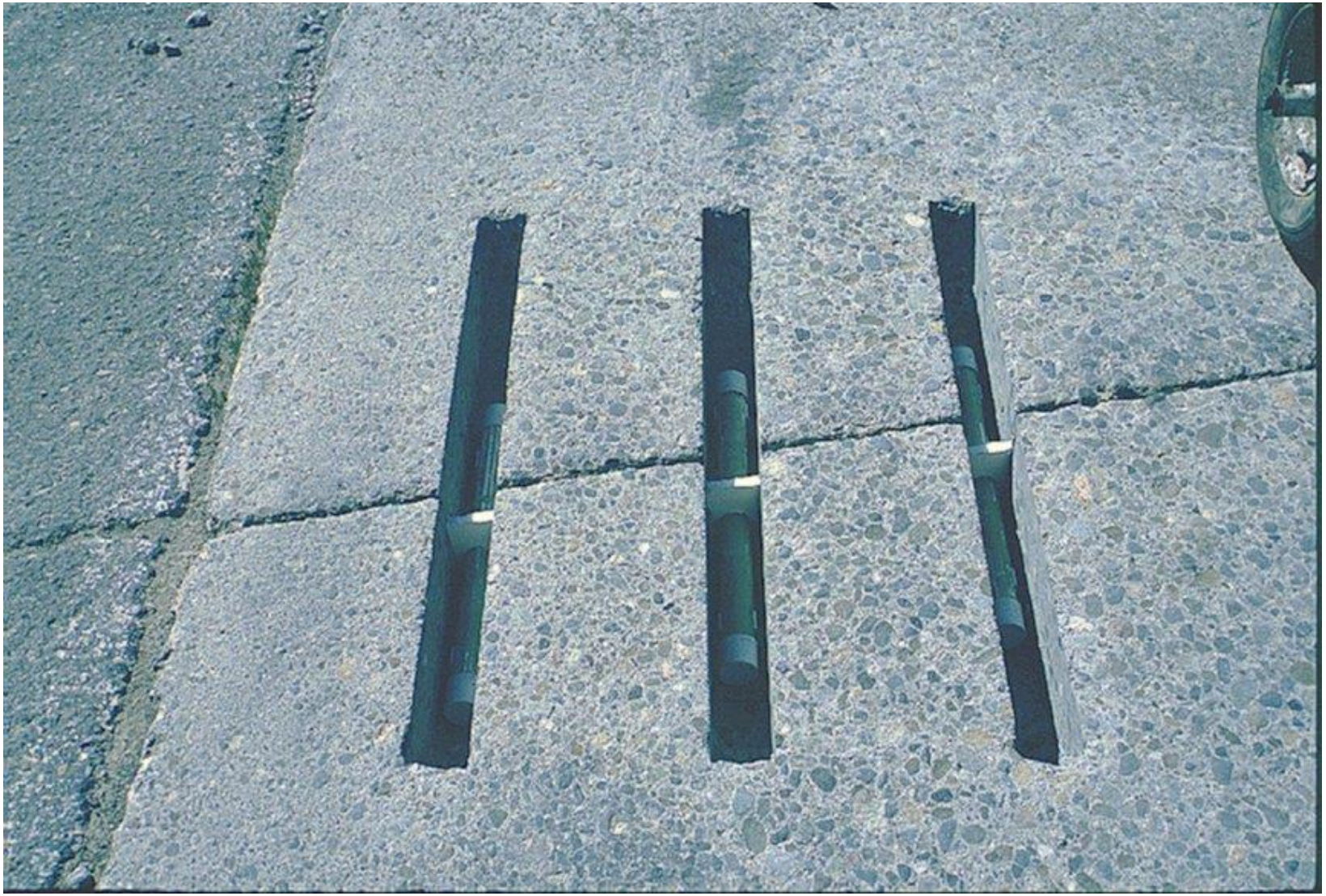

80974470
RSC
SERVICE
SALT LAKE
CITY

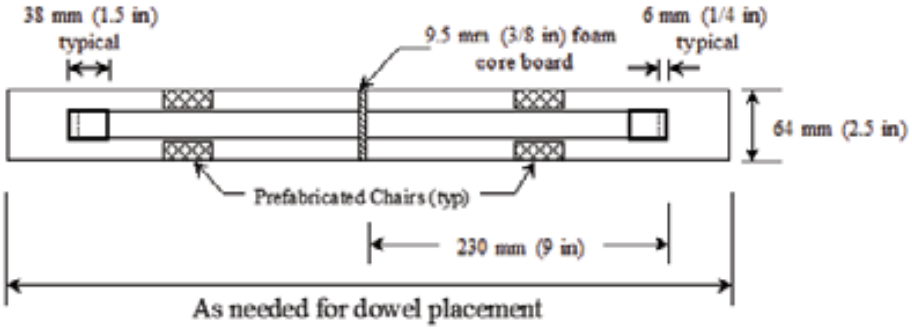
38 mm (1.5 in)
typical
9.5 mm (3/8 in) foam
core board
6 mm (1/4 in)
typical
64 mm (2.5 in)
Prefabricated Chairs (typ)
230 mm (9 in)
As needed for dowel placement

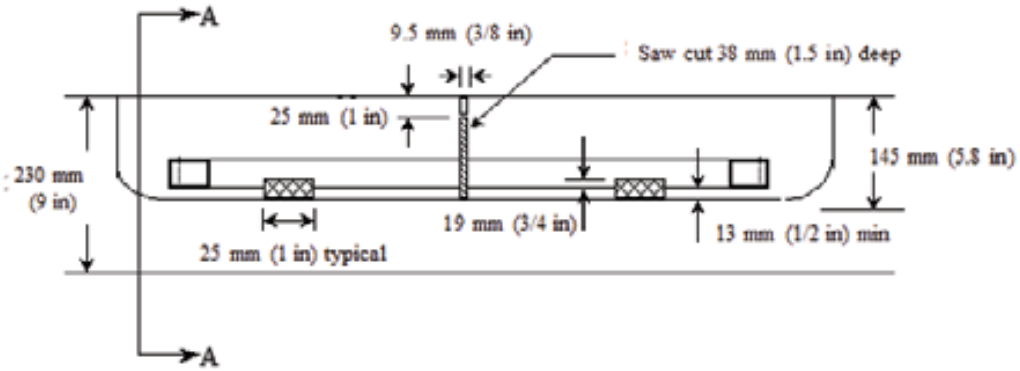
A
9.5 mm (3/8 in)
Saw cut 38 mm (1.5 in) deep
25 mm (1 in)
230 mm
(9 in)
145 mm (5.8 in)
19 mm (3/4 in)
13 mm (1/2 in) min
25 mm (1 in) typical
A

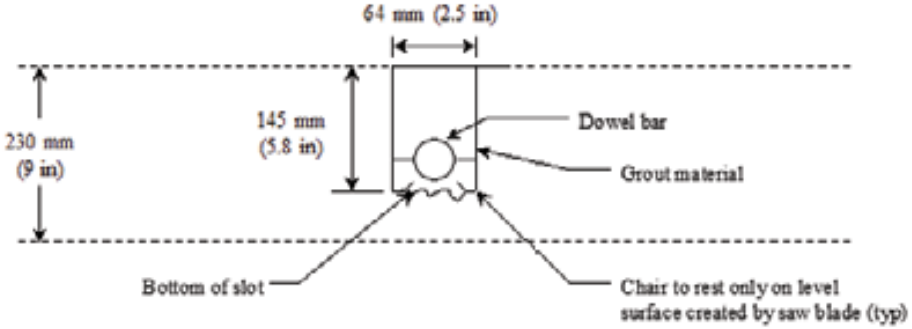
64 mm (2.5 in)
230 mm
(9 in)
145 mm
(5.8 in)
Dowel bar
Grout material
Bottom of slot
Chair to rest only on level
surface created by saw blade (typ)

Section A-A

JUL 11 2002

Section 7.2 Part A Specifications

A7.2.7.1 Repairing joints and cracks

h) R8 Treatment: (Forming and sealing of joints between asphalt surfacing and concrete pavements)

This method entails the saw cutting of a slot 50 mm deep in the existing asphalt surfacing directly adjacent to the concrete pavement, the cleaning of the joint reservoir and re-sealing of the joint with back-up material and a liquid sealant. Where excessive damage of the existing asphalt has taken place at the contact line between the asphalt and the liquid seal, the asphalt shall be removed to a width of 100 mm or 150 mm and replaced with continuously graded asphalt. The new seal shall then be installed.

Questions?

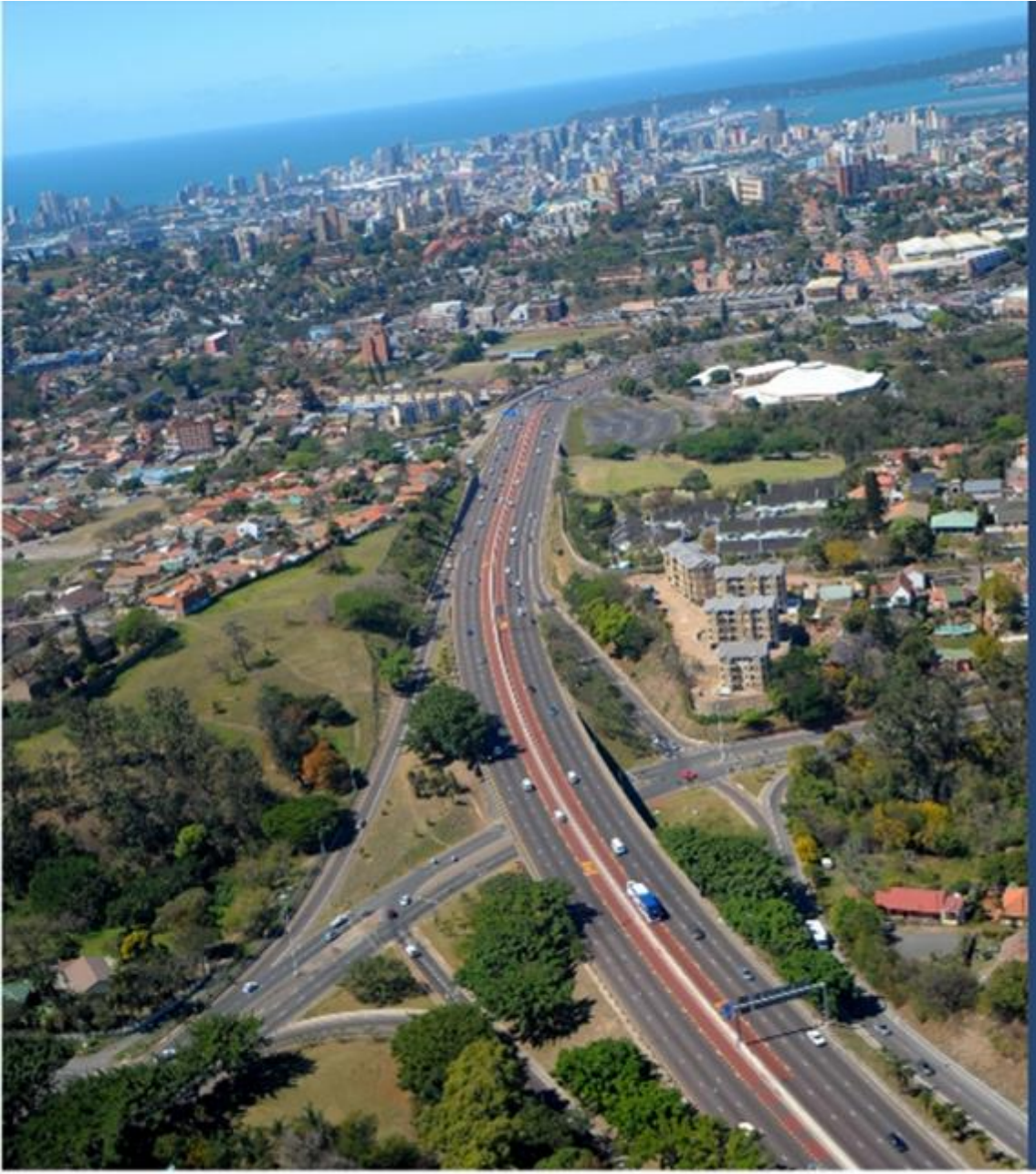

SARF

better roads

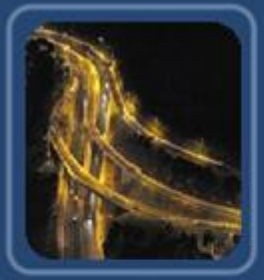

South African Road Federation

Maintenance and Repair of Concrete Pavements

Bryan Perrie

Cement & Concrete – SA

bryan.perrie@cemcon-sa.org.za

083 309 4260 / 011 315 0300

National Concrete Pavement Technology Center

September 2014

Second Edition

CONCRETE PAVEMENT PRESERVATION GUIDE

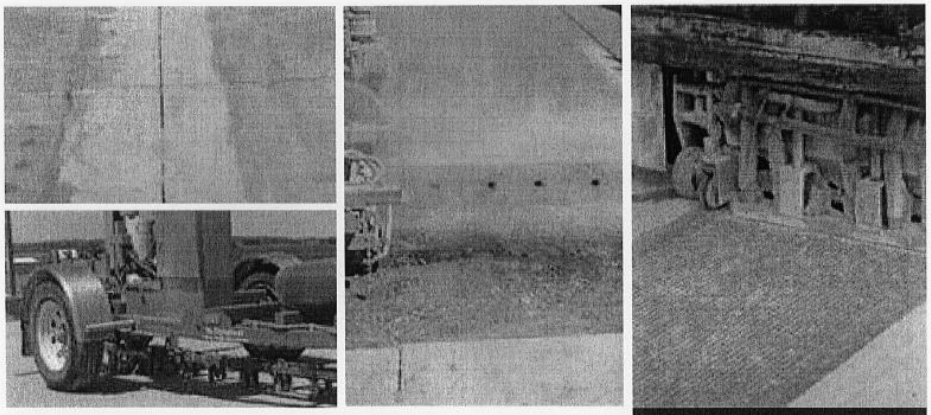

U.S. Department of Transportation
Federal Highway Administration

FHWA Publication No. FHWA-HIF-14-014

https://cptechcenter.org/
IGGA.net

Section 7.2 Part A Specifications

A7.2.7.2 Repairing joints and cracks by full-depth removal of concrete

a) Transverse crack and joint repairs by full depth removal of existing adjacent concrete:

(i) *Type T1 Treatment* applies to active transverse cracks situated approximately in the middle third of a slab or series of transverse slabs.

(ii) *Type T2 Treatment* applies to the repair of transverse cracks in close proximity to transverse joints where the one limit of the concrete repair area coincides with an existing transverse joint.

(iii) *Type T3 Treatment* applies where existing concrete is removed on either side of an existing transverse joint due to an active transverse crack crossing over the existing joint.

(iv) *Type T4 Treatment* is identical to type T3 treatment but applies only where the concrete is on either side of the joint line in separate operations.

Section 7.2 Part A Specifications

A7.2.7.2 Repairing joints and cracks by full-depth removal of concrete

a) Transverse crack and joint repairs by full depth removal of existing adjacent concrete:

(i) Type T1 Treatment

This treatment applies to active transverse cracks situated approximately in the middle third of a slab or series of transverse slabs. The existing concrete on either side of the crack is to be broken up and removed after two parallel saw cuts are made at positions indicated by the Engineer. Before the new concrete is replaced, tie bars are to be installed along one of the existing transverse concrete faces by means of drilling horizontal holes in the existing concrete and fixing tie bars with an epoxy adhesive paste. The vertical side of the existing concrete face with tiebars is then treated with a wet-to-dry epoxy adhesive. The other face is treated with a bondbreaker. The concrete and mesh are placed. New concrete shall be rounded and existing concrete mechanically bevelled along the line of contact. The line of contact between existing and new concrete which is not tied shall be sawn in one operation to a specified width and depth and the installation of a back-up material and a liquid sealant.

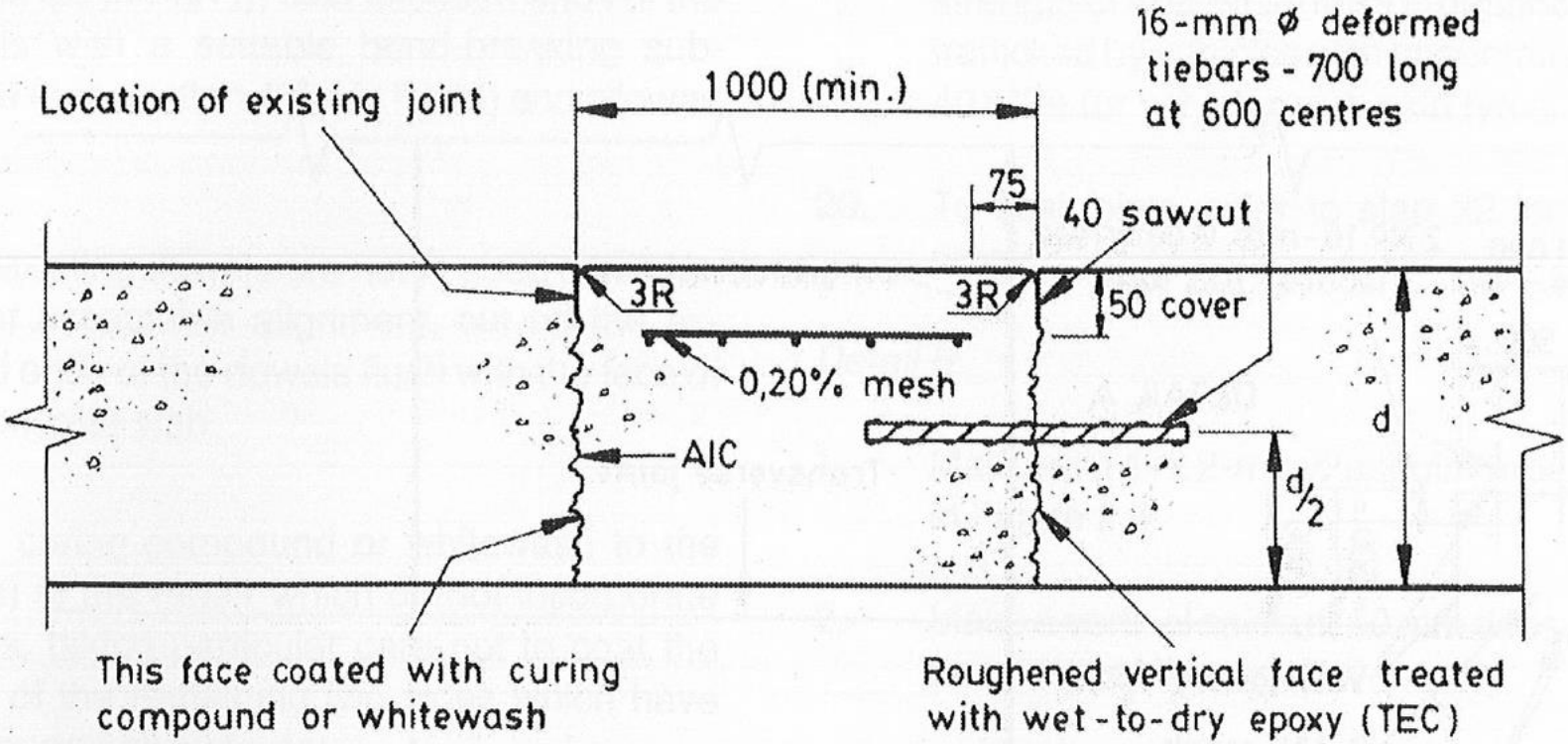

Figure 2.8: Type D full-depth repair: details of section 4-4 in Figure 2.5

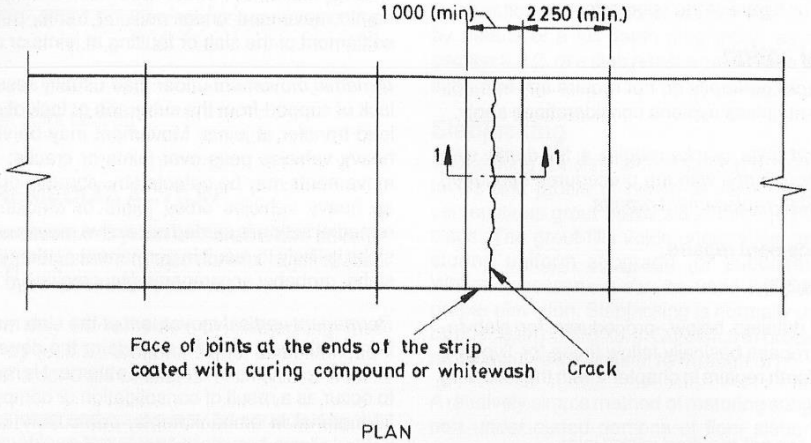

PLAN

NOTE: Where cracking occurs in two or more adjacent slabs the existing joint(s) at the ends of the strips must be reconstructed through the repair

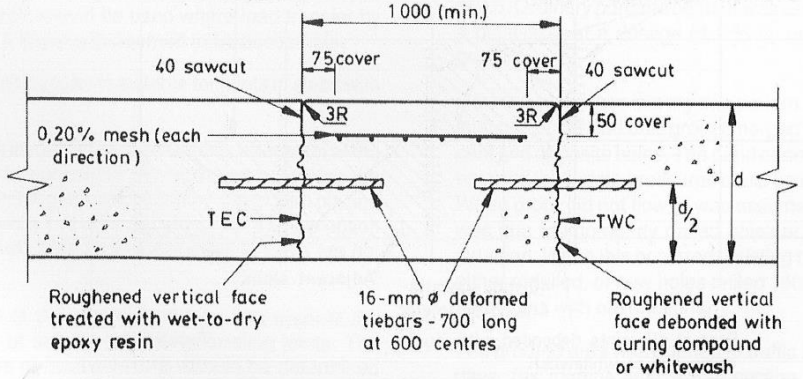

SECTION 1-1

Figure 3.2: Full-depth strip repair in the interior of a slab

Figure 51 Dowel Hole Drilling Jig For Full Depth Repairs

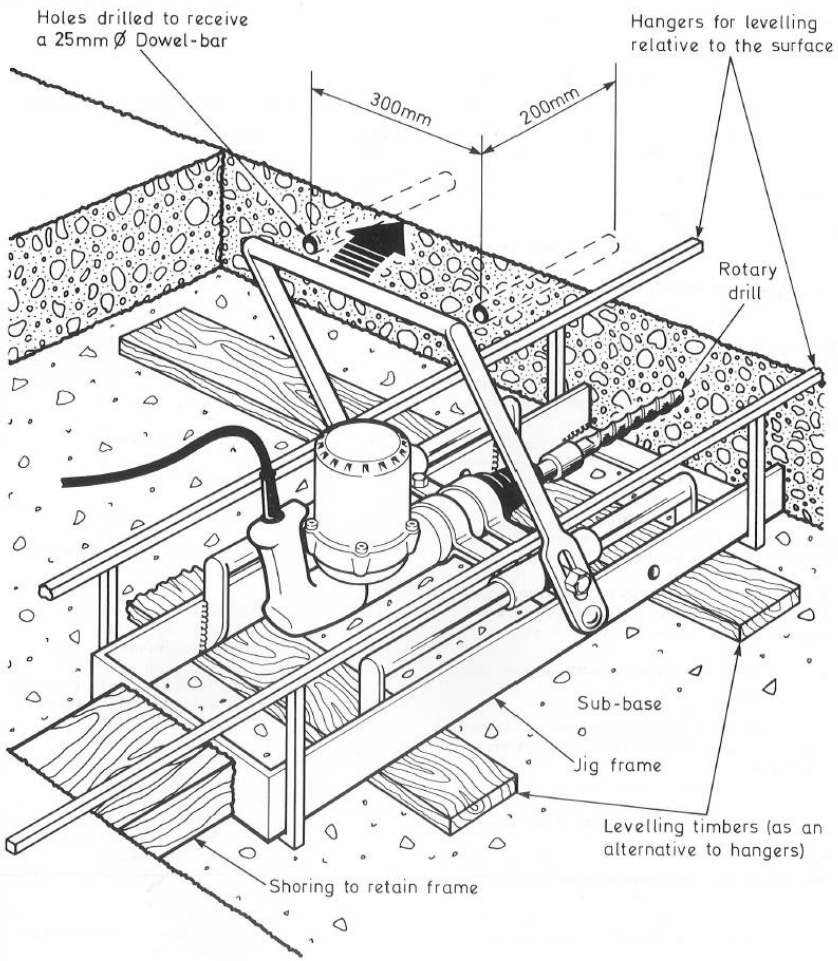

Section 7.2 Part A Specifications

A7.2.7.2 Repairing joints and cracks by full-depth removal of concrete

a) Transverse crack and joint repairs by full depth removal of existing adjacent concrete:

(ii) Type T2 Treatment Very similar to T1

This treatment applies to the repair of transverse cracks in close proximity to transverse joints where the one limit of the concrete repair area coincides with an existing transverse joint. A saw cut parallel to the joint encompasing the crack is made at a position indicated by the Engineer. The existing concrete on either side of the crack is to be broken up and removed. Before the new concrete is replaced, tie bars are to be installed along the newly cut face opposite the joint face by means of drilling horizontal holes in the existing concrete and fixing tie bars with an epoxy adhesive paste. The vertical side of the concrete face with tiebars is then treated with a wet-to-dry epoxy adhesive. The other face is treated with a bondbreaker. The concrete and mesh are placed. New concrete shall be rounded and existing concrete mechanically bevelled along the line of contact. A sawcut is made along the same line of the existing transverse joint on the contact line of existing and new concrete in one operation to a specified depth and width and installation of a back-up material and a new liquid sealant.

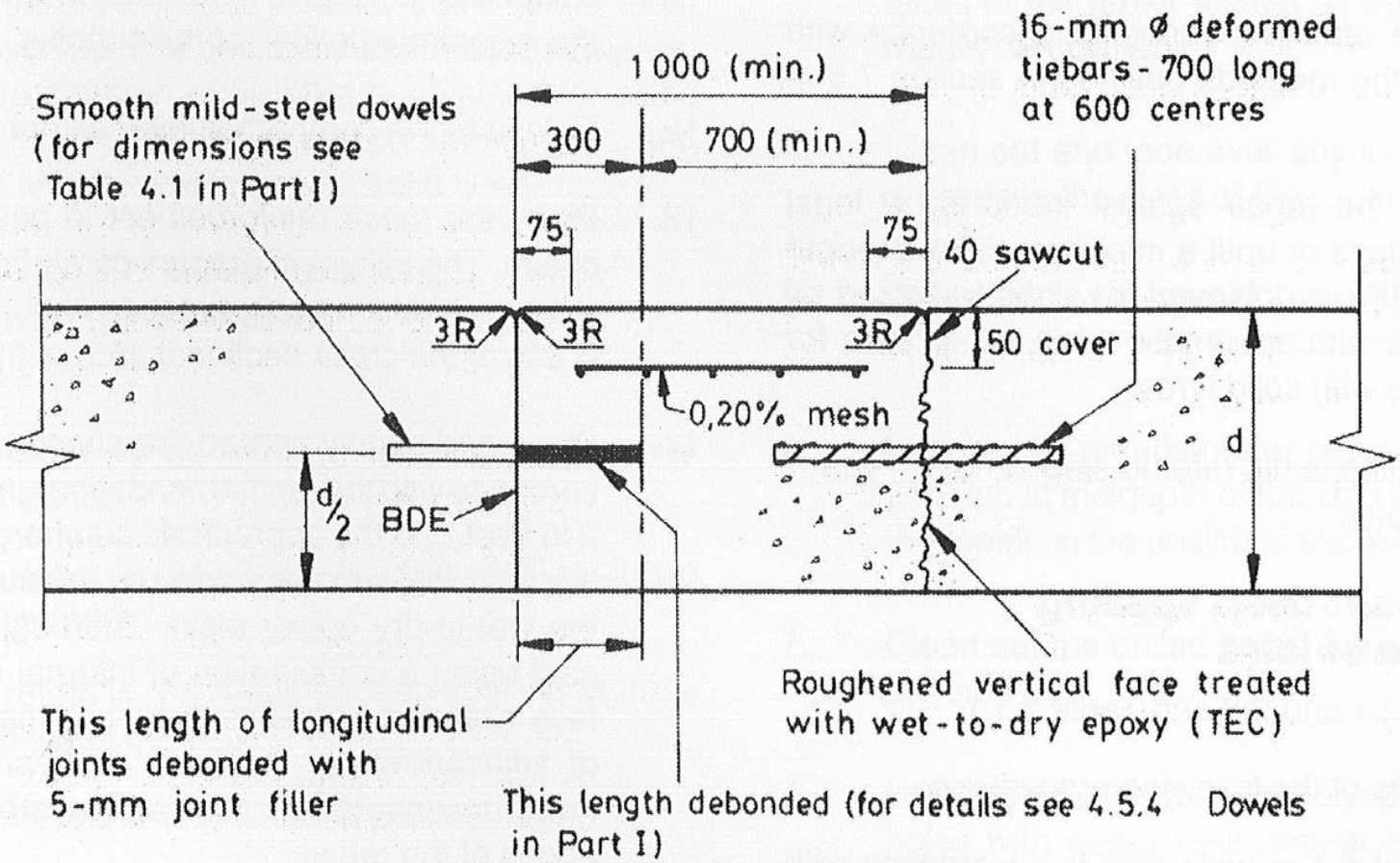

Figure 2.7: Type C full-depth repair: details of section 3-3 in Figure 2.4

Section 7.2 Part A Specifications

A7.2.7.2 Repairing joints and cracks by full-depth removal of concrete

a) Transverse crack and joint repairs by full depth removal of existing adjacent concrete:

(iii) Type T3 Treatment

This treatment applies where existing concrete is removed on either side of an existing transverse joint due to an active transverse crack crossing over the existing joint. The existing concrete on either side of the crack is to be broken up and removed after two parallel saw cuts are made at positions indicated by the Engineer encompassing the extent of the crack. Before the new concrete is replaced, tie bars are to be installed along both of the existing transverse concrete faces by means of drilling horizontal holes in the existing concrete and fixing tie bars with an epoxy adhesive paste. The vertical sides of the existing concrete faces with tiebars are then treated with a wet-to-dry epoxy adhesive. The concrete and mesh are placed. The sawing of the joint at the location and line of the original joint is performed in two operations consisting of an early 3,0 mm wide saw cut followed by the reaming of the joint to a minimum width of 6,0 mm and depth of 35 mm and the installation of a back-up material and a liquid sealant.

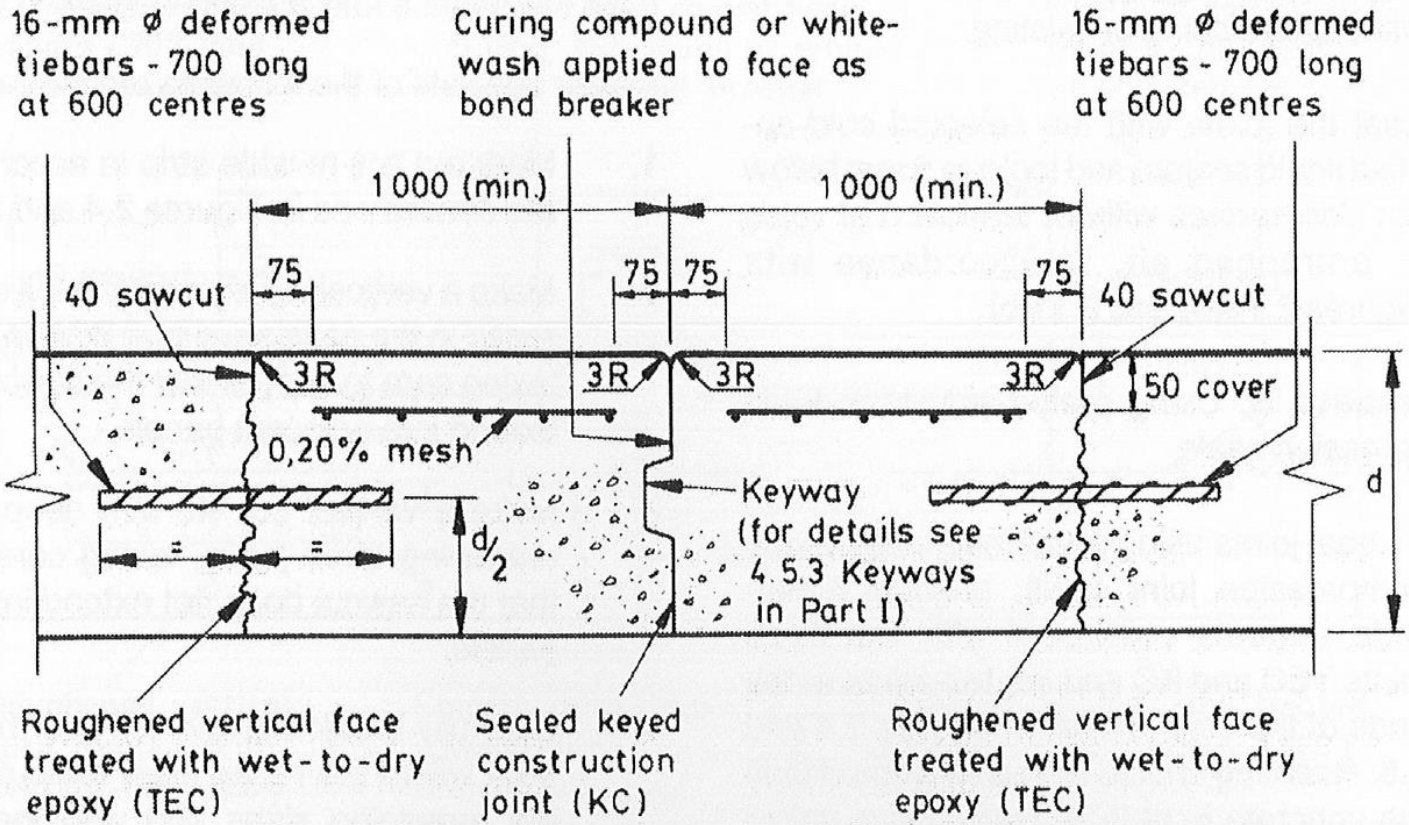

Figure 2.5: Type A full-depth repair: Details of section 1-1 in Figure 2.4

Section 7.2 Part A Specifications

A7.2.7.2 Repairing joints and cracks by full-depth removal of concrete

a) Transverse crack and joint repairs by full depth removal of existing adjacent concrete:

(iv) Type T4 Treatment

This treatment is identical to type T3 treatment but applies only where the concrete is on either side of the joint line in separate operations. The new concrete on either side of the transverse joint is placed in two operations with dowel bars treated with an approved bond breaking compound as shown on the drawings and installed across the joint during the casting of the first portion of concrete. Before the second portion of concrete is cast the vertical surface of the newly cast concrete shall be treated with a bond breaking agent. The transverse joint is then sawn in two operations and followed with the installation of a back-up material and liquid sealant.

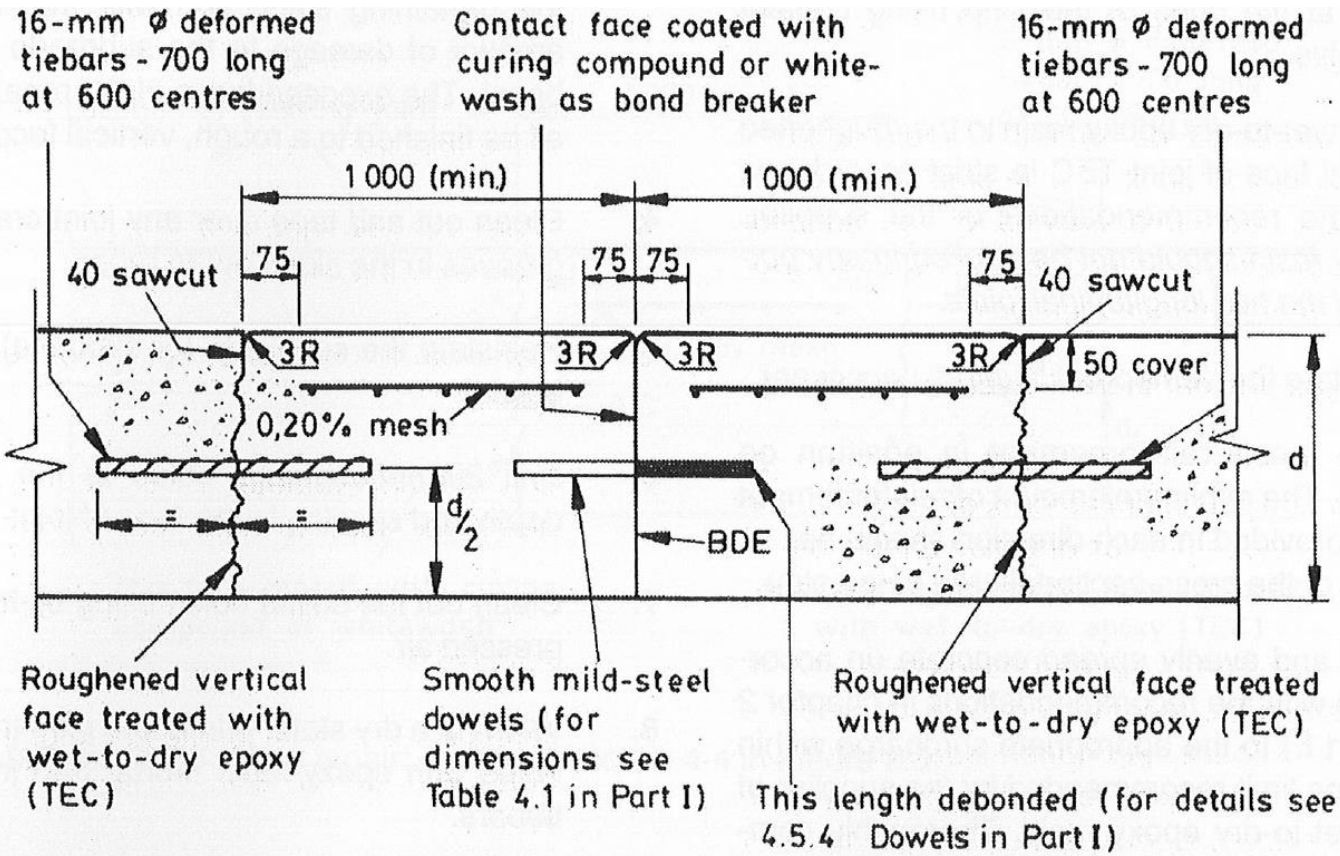

Figure 2.6: Type B full-depth repair: details of section 2-2 in Figure 2.4

Section 7.2 Part A Specifications

A7.2.7.2 Repairing joints and cracks by full-depth removal of concrete

a) Transverse crack and joint repairs by full depth removal of existing adjacent concrete:

(v) Type T5 Treatment

This type of treatment is similar to Type T2 treatment but applies when small portions of concrete slabs are removed and replaced due to corner breaks, short cracks or similar defects. The treatment entails the drilling of horizontal holes into the existing concrete, the application of an epoxy adhesive and the installation of a minimum of 3 tie bars before the placing of new concrete. Due to the small horizontal dimensions of the repair area the normal spacing of tie bars as specified will have to be adjusted to ensure that a minimum of three tie bars are installed. Wet-to-dry epoxy adhesive shall be applied to the surfaces where tie bars are installed and a bond breaking agent along the vertical face of existing concrete at the joint where movement is to take place. A sawcut is made along the same line of the existing transverse joint on the contact line of existing and new concrete in one operation to a specified depth and width and installation of a back-up material and a new liquid sealant.

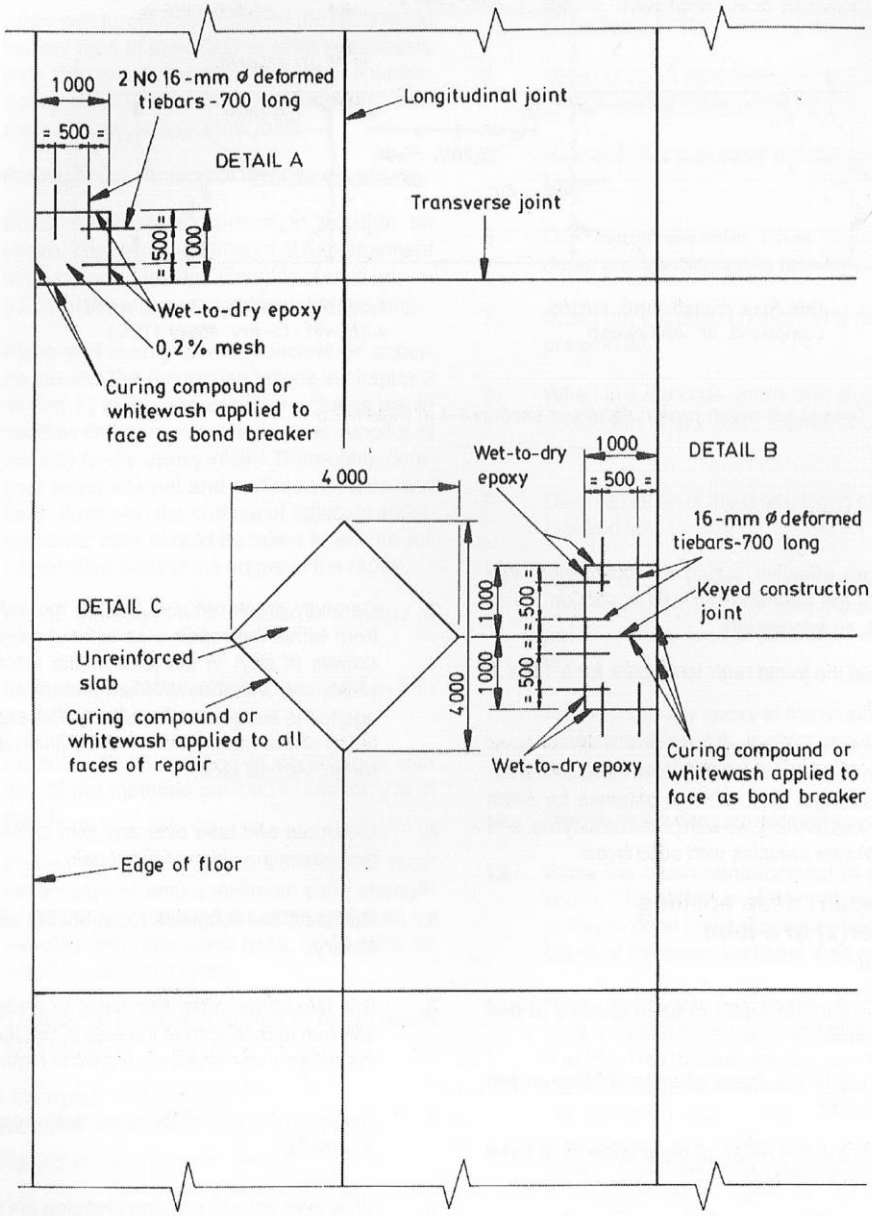

Figure 2.9: Type E full-depth corner repairs

Questions?

Section 7.2 Part A Specifications

A7.2.7.2 Repairing joints and cracks by full-depth removal of concrete

b) Longitudinal crack and joint repairs by full depth removal of existing concrete and incorporating the following treatments:

(i) *Type L1 Treatment* applies to active longitudinal cracks situated approximately in the middle third of a slab or series of longitudinal slabs.

(ii) Type L2 Treatment applies to the repair of longitudinal cracks in close proximity to longitudinal joints where the one limit of the concrete repair area coincides with an existing longitudinal joint.

(iii) Type L3 Treatment applies where existing concrete is removed on either side of an existing longitudinal joint due to an active longitudinal crack crossing over the existing joint.

(iv) Type L4 Treatment is identical to treatment type L2 above but applies where small areas of concrete slabs are removed and replaced.

Section 7.2 Part A Specifications

A7.2.7.2 Repairing joints and cracks by full-depth removal of concrete

b) Longitudinal crack and joint repairs by full depth removal of existing concrete and incorporating the following treatments:

(i) Type L1 Treatment

This treatment applies to active longitudinal cracks situated approximately in the middle third of a slab or series of longitudinal slabs. The existing concrete on either side of the crack is to be broken up and removed after two parallel saw cuts are made at positions indicated by the Engineer. Before the new concrete is replaced, tie bars are to be installed along both of the existing transverse concrete faces by means of drilling horizontal holes in the existing concrete and fixing tie bars with an epoxy adhesive paste. The vertical sides of the existing concrete faces are then treated with a wet-to-dry epoxy adhesive. New concrete and mesh shall be placed. New concrete shall be rounded and existing concrete mechanically bevelled along the line of contact.

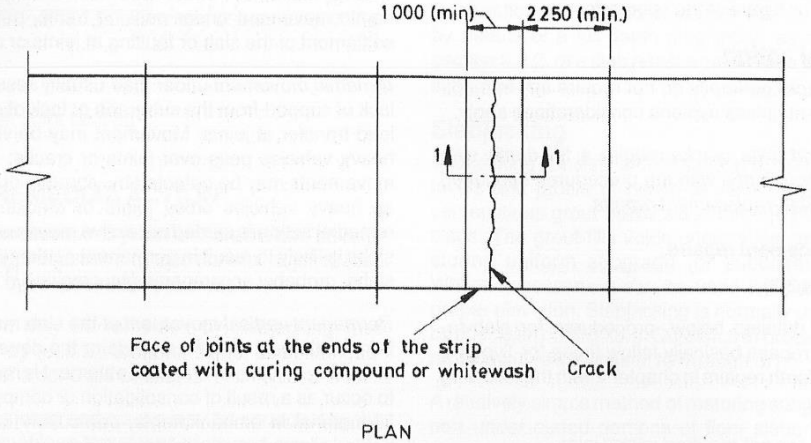

PLAN

NOTE: Where cracking occurs in two or more adjacent slabs the existing joint(s) at the ends of the strips must be reconstructed through the repair

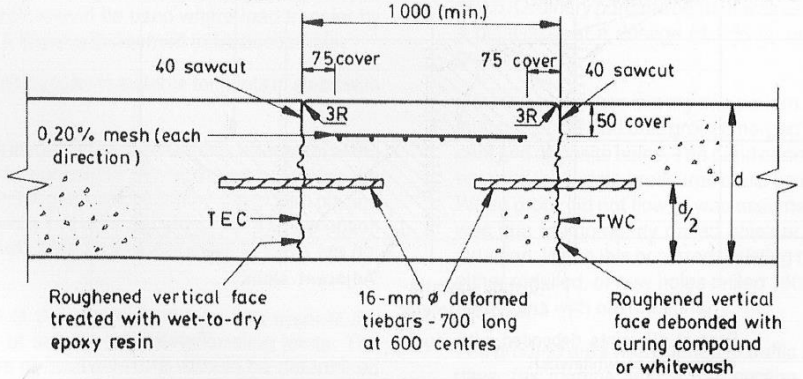

SECTION 1-1

Figure 3.2: Full-depth strip repair in the interior of a slab

Section 7.2 Part A Specifications

A7.2.7.2 Repairing joints and cracks by full-depth removal of concrete

b) Longitudinal crack and joint repairs by full depth removal of existing concrete and incorporating the following treatments:

(ii) Type L2 Treatment

This treatment applies to the repair of longitudinal cracks in close proximity to longitudinal joints where the one limit of the concrete repair area coincides with an existing longitudinal joint. A saw cut parallel to the joint encompasing the crack is made at a position indicated by the Engineer. The existing concrete on either side of the crack is to be broken up and removed. Before the new concrete is replaced, tie bars are to be installed along the newly cut face opposite the existing joint face by means of drilling horizontal holes in the existing concrete and fixing tie bars with an epoxy adhesive paste. Prior to placing concrete this face is to be treated with a wet-to-dry epoxy The existing tiebars in the longitudinal joint are to be cleaned and straightened with the installation of new tie bars if necessary and a bondbreaker is applied to this face. New concrete and mesh shall be placed. New concrete shall be rounded and existing concrete mechanically bevelled along the line of contact. A sawcut is made along the same line of the existing longitudinal joint on the contact line of existing and new concrete in one operation to a specified depth and width and installation of a back-up material and a new liquid sealant.

Section 7.2 Part A Specifications

A7.2.7.2 Repairing joints and cracks by full-depth removal of concrete

b) Longitudinal crack and joint repairs by full depth removal of existing concrete and incorporating the following treatments:

(iii) Type L3 Treatment

This treatment applies where existing concrete is removed on either side of an existing longitudinal joint due to an active longitudinal crack crossing over the existing joint. The existing concrete on either side of the crack is to be broken up and removed after two parallel saw cuts are made at positions indicated by the Engineer encompassing the extent of the crack. Before the new concrete is replaced, tie bars are to be installed along both of the existing longitudinal concrete faces by means of drilling horizontal holes in the existing concrete and fixing tie bars with an epoxy adhesive paste. The vertical side of one of the existing concrete faces with tiebars is then treated with a wet-to-dry epoxy adhesive. A longitudinal construction joint with tiebars is formed on the line of the original joint with tiebars and mesh and concrete are placed on one side of the longitudinal joint. When the formwork is removed, the face of the construction joints is treated with a bond breaking compound and the other face with a wet-to-dry dry epoxy. The concrete and mesh are placed. The sawing of the joint at the location and line of the original joint is performed in two operations consisting of an early 3,0 mm wide saw cut followed by the reaming of the joint to a minimum width of 6,0 mm and depth of 35 mm and the installation of a back-up material and a liquid sealant.

(

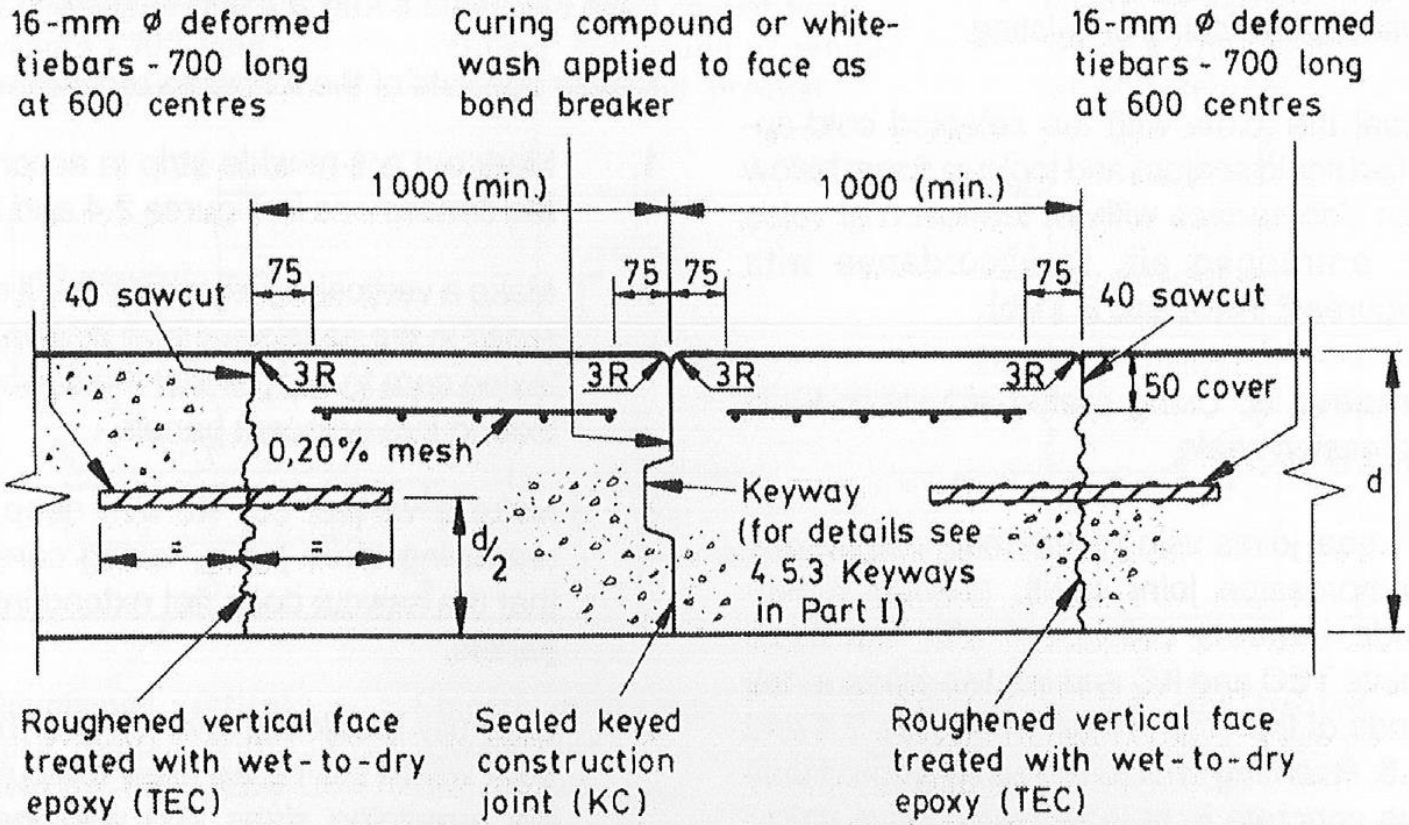

Figure 2.5: Type A full-depth repair: Details of section 1-1 in Figure 2.4

Section 7.2 Part A Specifications

A7.2.7.2 Repairing joints and cracks by full-depth removal of concrete

b) Longitudinal crack and joint repairs by full depth removal of existing concrete and incorporating the following treatments:

(iv) Type L4 Treatment

This treatment is identical to treatment type L2 above but applies where small areas of concrete slabs are removed and replaced. The treatment entails the drilling of horizontal holes into the existing concrete, the application of an epoxy adhesive and the installation of a minimum of 3 tie bars. Wet-to-dry epoxy shall be applied to the vertical face where tie bars are installed, a bond breaking agent shall be applied along the vertical face of the existing concrete at the joint, followed by rounding of the new concrete and bevelling of existing concrete along the joint.

Section 7.2 Part A Specifications

A7.2.7.3 Full depth repairs

Full depth repairs to isolated areas in the existing concrete panels shall be carried out at positions of both transverse and longitudinal cracking where the degree of cracking has progressed to high severity and where there is evidence of surface spalling or faulting. Full depth repairs shall also be required where spalling at joints or surface “pop-outs” extend beyond a depth greater than 75 mm from the surface.

Full depth repair work shall include:

- saw cutting around the perimeter of the repair sections,
- breaking up and removal of the concrete paving within the repair section,
- preparation of surfaces including repairs to subbase
- application of bond-breaker or wet to dry epoxy to faces,
- drilling and installation of tie-bars, dowels
- reinstatements of continuous reinforcing where it has been severed,
- placing and finishing of new concrete.

The nature of full depth repairs therefore is such that all identified defective concrete pavement within panels shall be repaired.

Section 7.2 Part A Specifications

A7.2.7.3 Full depth repairs

a) Removal of existing concrete

Prior to removal of concrete an initial full depth pilot saw cut shall be made 60 mm inside the boundary of the repair area and the concrete within this initial saw cut shall be removed by either of two methods:

- the break up and clean out method or

- the lift out method

(i) The break up and clean out method may be carried out with a front end loader used together with a jackhammer. Breaking out may be facilitated by additional intermediate saw cuts. The breaking operation shall proceed from the centre of the repair area towards the

boundary saw-cuts to eliminate damage to the adjoining slabs. Care shall also be taken with this method to avoid damage to the subbase or to adjacent slabs.

Section 7.2 Part A Specifications

A7.2.7.3 Full depth repairs

a) Removal of existing concrete

(ii) The lift out method shall require lifting hooks to be attached to the slab and heavy lifting equipment to lift out larger areas. Alternatively the slab may be sawed into smaller pieces so that they can be lifted out by a front end loader. Although this method is less liable to damage the subbase and adjacent slabs, the Contractor is required to dispose of larger pieces of concrete.

Any repairs necessary to the subbase and adjacent slabs due to damage caused by the removal and breaking out of the concrete shall be to the Contractor's cost. If during the process of breaking out the concrete, the sawn edge of the remaining concrete is damaged beyond the repair boundary, a further pilot cut parallel to the initial cut shall be sawn without any payment to the Contractor.

After removal of the bulk concrete a final saw cut, 50 mm deep, shall be made on the boundary of the repair area, 60 mm back from the pilot cut. This remaining 60 mm vertical wedge shall be chopped out using hand tools or light pneumatic hammers with a maximum size of 14 kg in order to provide a rough vertical face for aggregate interlock load transfer.

Section 7.2 Part A Specifications

A7.2.7.3 Full depth repairs

a) Removal of existing concrete

Where saw-cuts cross over each other at corners of repair areas, the saw-cuts extending beyond the boundary of the repair shall be filled with an approved epoxy filler to the surface of the concrete pavement and the cost of such work shall be included under the rates for the repair. The Contractor shall demonstrate by means of a trial that he is able to achieve a full depth penetration of the epoxy into the saw cuts extending beyond the boundary of the repair.

Broken up concrete shall be removed from the road and road reserve and spoiled at locations arranged by the Contractor himself. No overhaul will be payable for the removal of broken up concrete or any other materials resulting from the breaking up of concrete.

Full-Depth Patching

Sizing a Patch

- Go beyond area of deterioration
- Check for below-surface spalling
- Minimum length dependant on pavement thickness. w/l ratio =1ideal. 2/1maximim
- Adjust as necessary
- Combine closely spaced patches

Field Adjustments

If Patch_Boundary:

- Falls within 2 m of transverse joint
  - Then extend to include joint ? (tied/reinforced???)
- Falls on or very near a doweled joint
  - Then extend beyond joint 300mm to remove the dowels
- Falls on a crack
  - Then extend beyond crack by 150mm

Sawing Boundaries

- Use diamond bladed saws
- Saw through the joints so base of blade reaches boundary
- Isolate transverse, longitudinal and shoulder
- Provide pressure-relief cut within patch

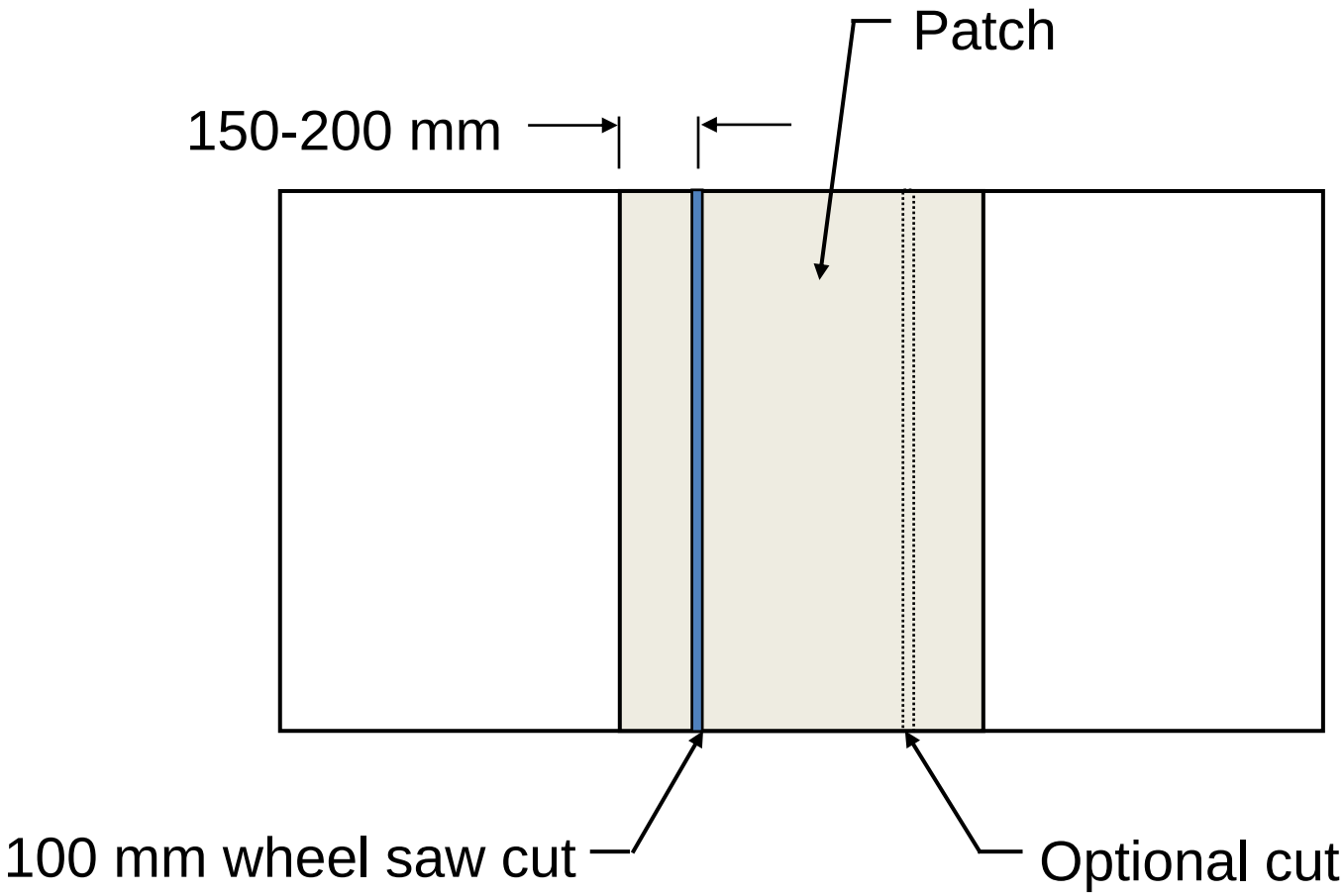
Patch
150-200 mm
100 mm wheel saw cut
Optional cut

Removal

- Liftout
  - Pin and chain
  - Claw
- Breakup
  - Handheld pneumatic hammers
  - Drop Hammers or rams

Top View

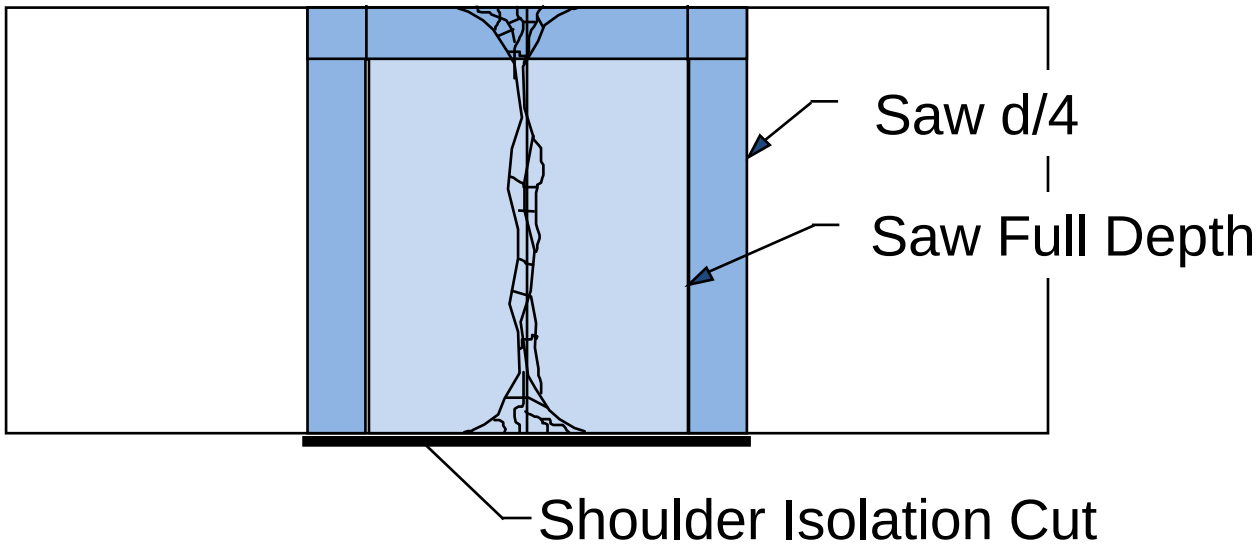

Side View

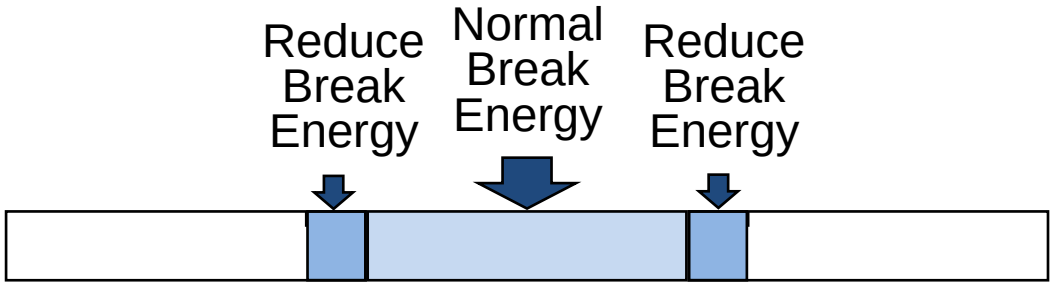

Section 7.2 Part A Specifications

A7.2.7.3 Full depth repairs

b) Preparation of repair area

After the existing concrete has been removed, the repair area shall be cleaned out using oil-free compressed air to remove all dust and loosened concrete. Any partially loosened concrete that remains shall be removed by hand tools and wire brushing. The subbase shall then be examined and any loose material which has been disturbed below the desired level of clean-out, shall be removed and repaired. The disturbed area shall be neatly cut out to dimensions and depths as directed by the Engineer and the excavated cavity shall be cleaned of all loose debris. The underlying pavement layers shall be compacted if required to the satisfaction of the Engineer and the cavity backfilled with a Class 10/20 concrete and finished level with the adjacent subbase.

Where specified on the drawings, tie-bars shall be placed into the face of the existing slab. The equipment used for drilling tie-bars shall preferably be the hydraulic percussion type and the drill shall not crack or spall the adjacent concrete. Tie bar holes shall be drilled at mid-depth of the slab, and the diameter of the hole shall be a minimum of 4,0 mm, but not more than 6,0 mm, larger than the tie bar diameter as specified. A drill support system, using the pavement surface or subbase as a reference, shall be required to assure correct alignment. Hand-held drills shall not be permitted.

Preparing Patch Area

- Add and compact new subbase material if necessary
- Use 17-27 kN vibratory plate compactors
- Drain rainwater as necessary

Section 7.2 Part A Specifications

A7.2.7.3 Full depth repairs

c) Installation of tie bars

After drilling, the tie-bar holes shall be cleaned out with compressed air prior to grouting in the tie-bars utilising an approved quick setting non-shrink epoxy. The epoxy shall be injected to the rear of the hole and shall be dispersed along its full length to ensure that the bars are completely covered and no voids exist. Lockset resin cartridge anchor systems may also be used. The bars shall be inserted with a twisting motion and seated in place by tapping. Tie-bars shall be placed parallel to the surface and centre line of the pavement for transverse joints or perpendicular to the centre line for longitudinal joints.

After placing of tie-bars the repair area shall again be cleaned out with oil free compressed air at a minimum pressure of 0,5N/mm2. The subbase shall then be sprayed with a bitumen emulsion bond breaking agent and the vertical faces of existing paving coated with bond-breaker, or wet to dry epoxy as indicated on the drawings. Wet to dry epoxy shall only be applied to a clean and dry concrete face, free of all dirt, loose material.

Section 7.2 Part A Specifications

A7.2.7.3 Full depth repairs

d) Installation of dowels

Dowels shall be positioned at the depth specified, measured from the surface level of the slab, within a tolerance of ± 10 mm. They shall be aligned parallel to the finished surface of the slab, to the centreline of the carriageway and to each other within the following tolerances:

- All dowels in a joint shall be aligned within ± 2,0 mm per 300 mm length of bar.
- No individual dowel shall differ in alignment from an adjoining bar by more than 3,0 mm per 300 mm length of bar in either the horizontal or vertical planes.
- All dowels in a joint shall be within ± 4,0 mm per 300 mm length of bar.
- No individual dowel shall differ in alignment from an adjoining bar by more than 6,0 mm per 300 mm length of bar in either the horizontal or vertical planes.
- All dowels shall be equally positioned about the intended line of the joint within a tolerance of ± 25 mm.

Drilling Dowel/Tie Bar Holes

- Adjust location of hole for:
  - Cracks
  - Embedded steel
  - Major spalling
- Size hole diameter for grout
  - Cement-based use *DOWEL DIA. + 5 mm*
  - Epoxy use *DOWEL DIA. + 2 mm*

Cleaning Holes

- Compressed air
- Insert air wand to back of hole
- Check compressor for moisture and oil contamination with clean cloth

Installing Dowels

- Feed material to back of hole
- Insert dowel properly
- Use retention disk

1

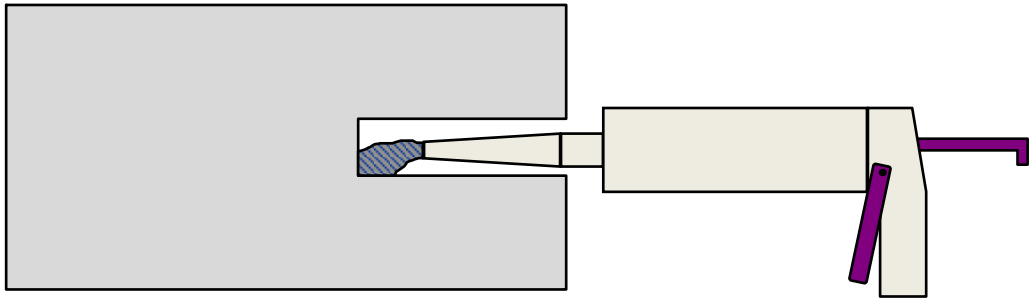

Inject Grout
to Back of Hole

2

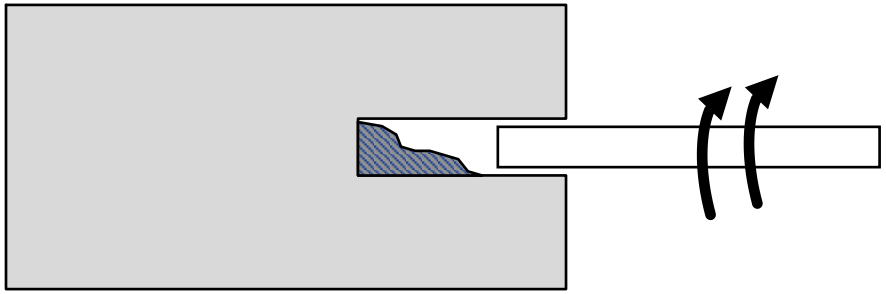

Twist one turn
while pushing
in dowel

3

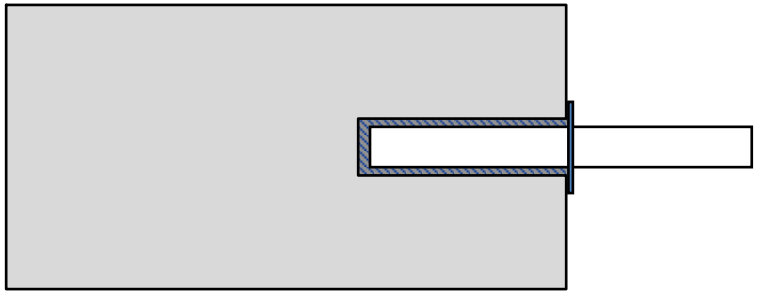

Place grout
retention disk to
hold in grout

Section 7.2 Part A Specifications

A7.2.7.3 Full depth repairs

e) Placing of Concrete

The time intervals between sawing, concrete removal, preparation and placing new concrete shall be as short as possible in order to eliminate or reduce any potential for slab creep.

The subbase shall be damped down before the application of the wet to dry epoxy to the vertical concrete faces. The repair concrete shall be placed when the wet to dry epoxy is tacky and within the time limit stipulated by the manufacturer of the epoxy. Where high early strength concrete is required for early re-opening to traffic, the Contractor shall be required to mix the concrete as close as possible to the location of the repair area in order to avoid premature setting of the concrete prior to placing. The concrete shall be placed and evenly spread up to the level of the mesh reinforcing (were specified) as shown on the Drawings.

The mesh shall then be placed in position and the remainder of the concrete placed. The mesh shall be accurately cut to the dimensions required and shall be discontinuous at joints. The concrete shall be compacted in place by means of an internal poker vibrator particularly near the edges and corners. The surface shall be struck off at least twice with a screed flush with the existing pavement at the repair limits.

Section 7.2 Part A Specifications

A7.2.7.3 Full depth repairs

e) Placing of Concrete

While the concrete is still plastic, the Contractor shall test the repair surface which shall be finished flush with the surrounding pavement to within a tolerance of ± 3,0 mm between the surface of the repair and a straight edge placed on the adjacent concrete surface. Where two adjacent panels are placed together across a transverse joint, transverse and longitudinal joints shall be formed by means of saw cutting as shown on the Drawings. The initial saw-cut to the joint be carried out at the correct time and depth in order to avoid shrinkage cracks developing. Initial saw-cutting time is dependent on temperature, curing etc. and should be carried out when the concrete strength is approximately 4 MPa and when only slight ravelling of the joint occurs. The joint shall be sawed before the concrete cracks but before 24 hours after placement.

Only after the repair has been completed and gained adequate strength, shall the transverse joints be treated and re-sealed in accordance with Clause A6.1.7 of Chapter 6 as relevant.

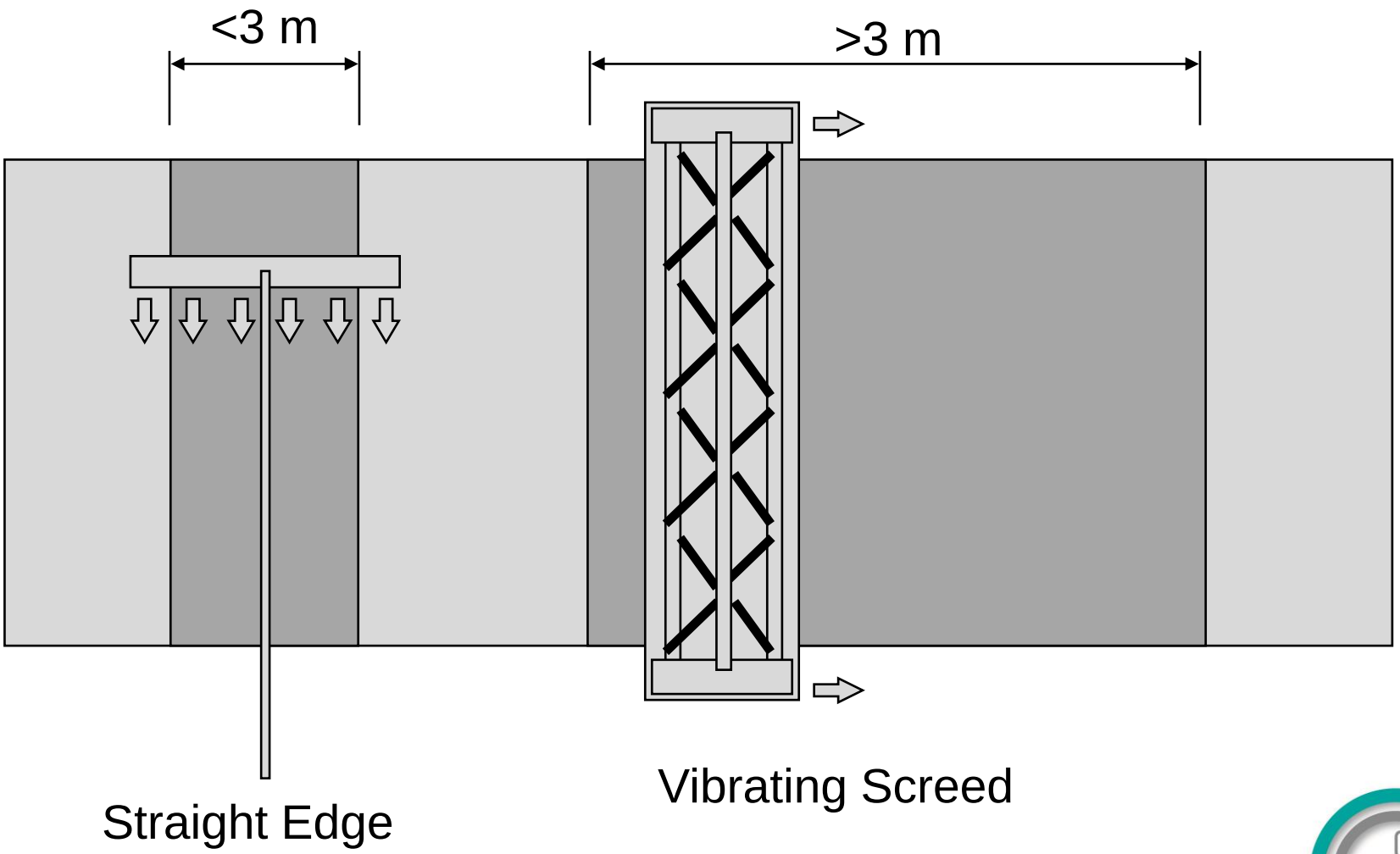
<3 m
>3 m
Straight Edge
Vibrating Screed

CRC Patches

- Two cuts for each transverse boundary
  - Full-depth inner cut
  - Partial-depth perimeter cut
- Salvage segments of old steel by chipping
- Splice new steel

2001 10 1

2001 10 1

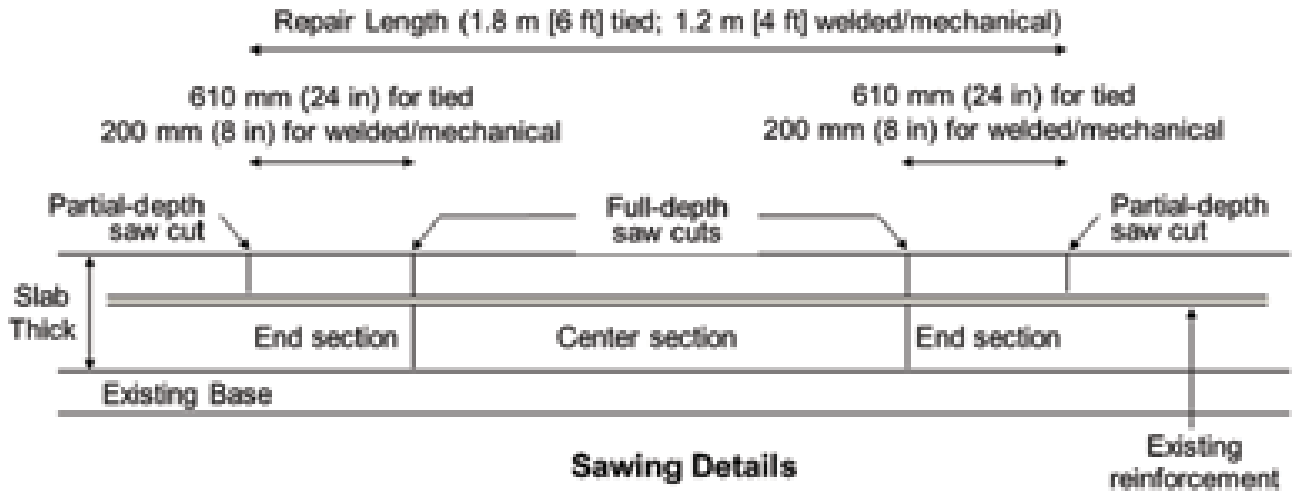

Sawing Details

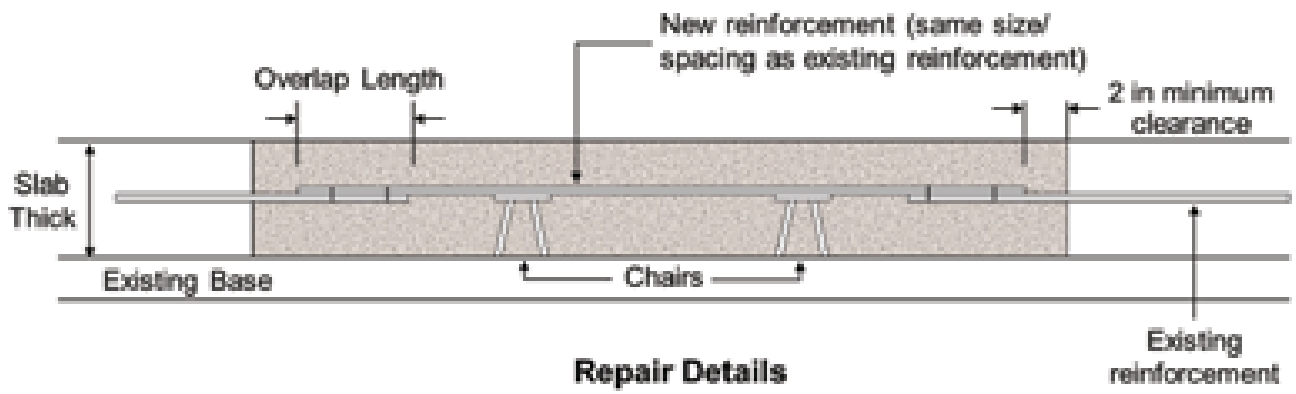

Repair Details

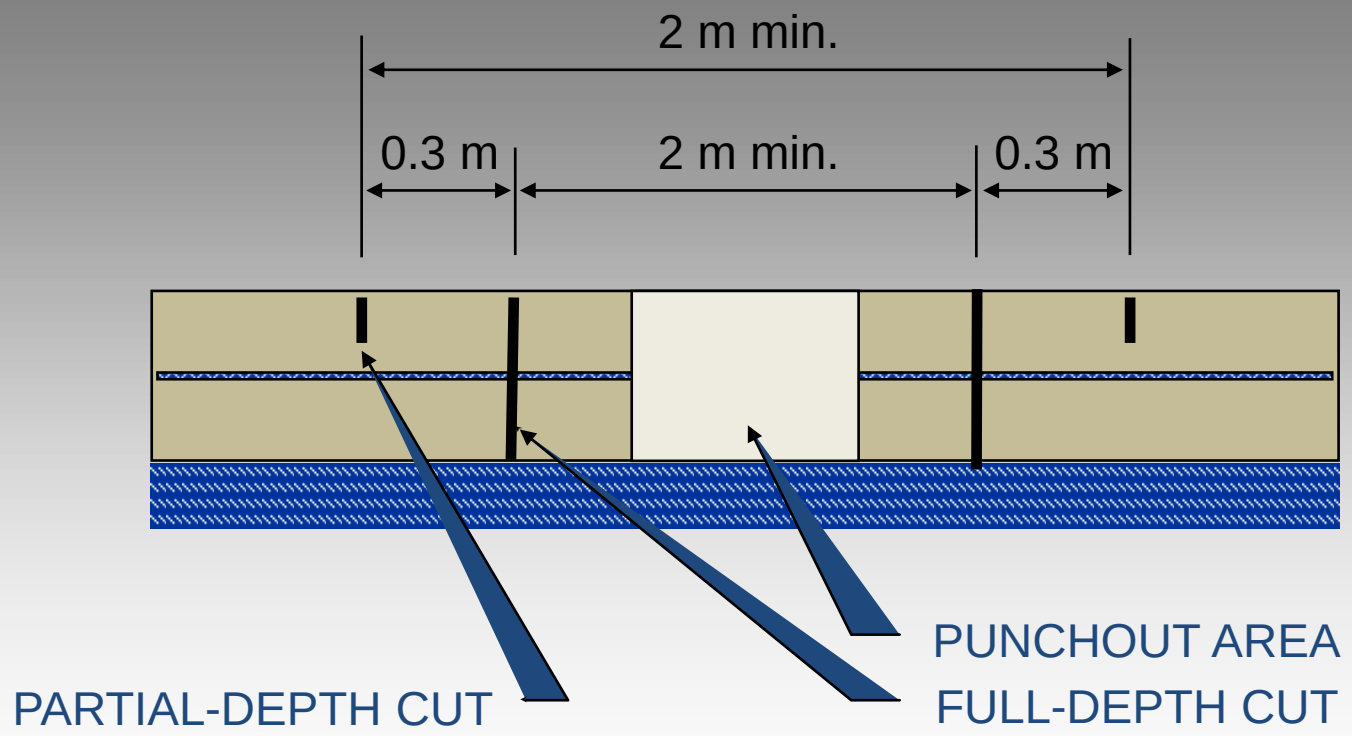
2 m min.
0.3 m
2 m min.
0.3 m
PUNCHOUT AREA
PARTIAL-DEPTH CUT
FULL-DEPTH CUT

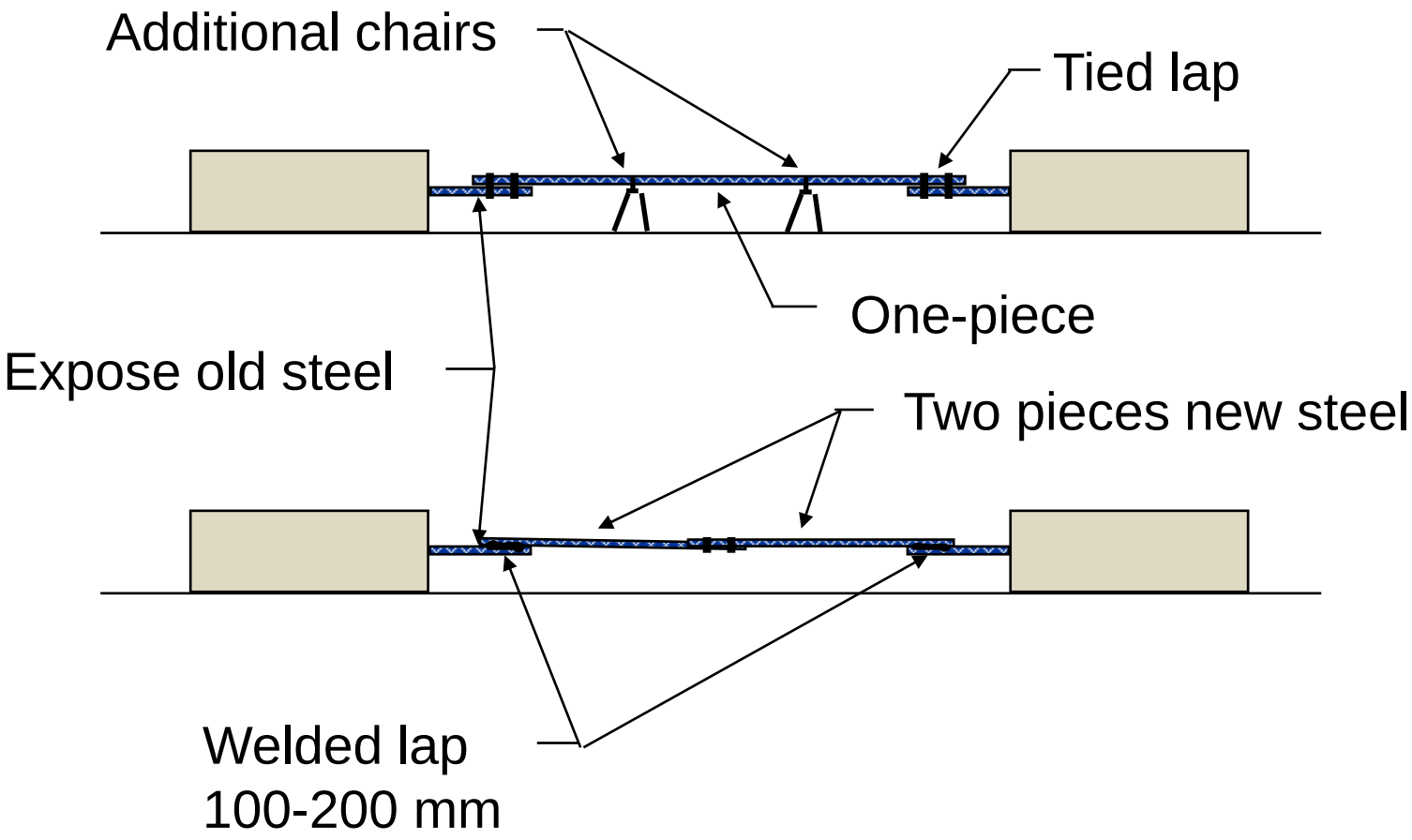
Additional chairs
Tied lap
One-piece
Expose old steel
Two pieces new steel
Welded lap
100-200 mm

Section 7.2 Part A Specifications

A7.2.7.3 Full depth repairs

f) Texturing

Texturing shall comply with the requirements of Clause A6.1.7 of Chapter 6 and shall, as far as possible, match the existing texture. Hand operated texturing devices shall be permitted with texturing commencing immediately after finishing with the burlap drag. The depth of texturing shall be between 2,0 and 4,0 mm, and the spacing of the grooves shall not be less than 12 mm and not more than 25 mm apart in a random pattern. The direction of the texturing shall be at right angles to the longitudinal axis of the pavement. The surface texture shall be applied and completed before the concrete is so hard that the surface will be torn and coarse aggregate unduly loosened during texturing.

Texturing Patch

- Texture soon after finishing
- Texture similar to surrounding concrete surface
  - burlap drag
  - tine (match spacing)
- Do not delay curing

Curing

Generally utilise high-early strength concrete therefore:

- Apply curing compound a.s.a.p
- Apply sufficient curing compound evenly

Section 7.2 Part A Specifications

A7.2.7.3 Full depth repairs

g) Curing

The repair shall be cured immediately after casting by the application of an approved resin based white pigmented curing compound as prescribed in Clause A6.1.5 of Chapter 6. In order to assist accelerated curing for earlier reopening to traffic the repair shall be covered with black polythene sheeting as soon as it can be applied without damaging the surface.

In hot and dry weather conditions, the repair shall first be covered with wet hessian before covering with the polythene sheet. During cold weather or at night, the polythene sheeting shall be covered over with polystyrene sheeting or other insulation board as appropriate.

h) Trafficking

No traffic shall be permitted on any repaired areas until the concrete has achieved a strength of > 30 MPa and all the joints have been sealed.

Section 7.2 Part A Specifications

A7.2.8 Workmanship

A7.2.8.1 General

The completed work shall exhibit no uncontrolled cracking.

A7.2.8.2 Level

When measured with a 3,0 m straight edge, the difference in level between the patch and the adjacent existing pavement shall be within ± 3,0 mm.

A7.2.8.3 Texture

The average depth of texture shall be between 2,0 and 4,0 mm as prescribed. ngth of > 30 MPa and all the joints have been sealed.

Section 7.2 Part B Labour Enhancement

All provisions of Part A apply

Section 7.2 Part C Measurement and Payment

C7.2.1 Transverse and longitudinal crack and joint repairs incorporating the following treatments

C7.2.1.1	Routing of active cracks (indicate width and depth)	metre (m)
C7.2.1.2	Routing of non-active cracks (indicate width and depth)	metre (m)
C7.2.1.3	Bevelling of one side of the crack (indicate dimension)	metre (m)
C7.2.1.4	Bevelling of both sides of the crack (indicate dimension)	metre (m)
C7.2.1.5	Saw cutting of cracks and joints in one operation (indicate depth and width)	metre (m)
C7.2.1.6	Filling joint reservoir with cementitious non-shrink grout	kilogram (kg)
C7.2.1.7	Installation of backing material in saw cut joints (to fit saw cut dimensions)	metre (m)
C7.2.1.8	Installation of cold pour sealant	litre (ℓ)

Section 7.2 Part C Measurement and Payment

C7.2.2 Grouting of cracks metre (m)

C7.2.3 Cross-stitching of longitudinal and transverse joints and cracks

C7.2.3.1 Saw cutting of slots in concrete pavement (indicate dimensions) number (No)

C7.2.3.2 Application of wet-to-dry epoxy to vertical faces and top of existing concrete litre (ℓ)

C7.2.3.3 Installation of 16 mm diameter deformed tie-bar (indicate length) including application of self-levelling pourable epoxy grout and 7,1 mm aggregate. number (No)

C7.2.3.4 Filling of slot with high strength concrete Class 50/7,1 mm cubic metre (m^3)

Section 7.2 Part C Measurement and Payment

C7.2.4 Restoration of load transfer at transverse contraction joints

C7.2.4.1 Saw cutting and preparation of slots in concrete pavement (indicate dimensions) number (No)

C7.2.4.2 Installation of new dowel bars as specified (indicate length and diameter) including application of bond breaker on free end, end caps. number (No)

C7.2.4.3 Filling of slot with high strength concrete Class 50/7,1 mm number (No)

C7.2.5 Pre-treating existing dowels

C7.2.5.1 Free ends in existing concrete number (No)

C7.2.5.2 Free ends in new concrete number (No)

Section 7.2 Part C Measurement and Payment

C7.2.6 Texturing and curing the concrete pavement

C7.2.6.1 Burlap-dragged and grooved texture: square metre (m^2)

C7.2.6.2 Curing

(a) Paving train constructed square metre (m^2)

C7.2.7 Variation in the rate of application of the curing compound litre (ℓ)

C7.2.8 Steel reinforcement in concrete pavements

C7.2.8.1 Mild steel bars ton (t)

C7.2.8.2 High tensile steel bars ton (t)

C7.2.8.3 Welded steel fabric kilogram (kg)

Section 7.2 Part D Guarantees and Compliance

No requirements

Questions?

Chapter 7

Section 7.3 Removal and Reinstatement of Existing Concrete Layers

Section 7.3 Part A Specifications

A7.3.1 SCOPE

This Section covers work related the removal and replacement of concrete pavements in the following instance:

- Sections where the newly placed concrete layer as completed in accordance with Chapter 6: Concrete Layers has been rejected by the Engineer as a result of poor construction, finishing or uncontrolled cracking. This work shall not be subject to any payment.

- Where isolated non-continuous panels, or part of a panel, require replacement as part of the periodic maintenance/repair of an existing pavement as described in the Contract Documentation. This work shall be subject to payment in accordance with the specifications and rates at tendered in Part C: Measurement and Payment of this Section A7.3.

Where concrete pavements have to be widened, or where long continuous sections of concrete pavement have to be replaced and the concrete can be placed with pavers, the work shall be regarded, and be measured and paid for, as new work in accordance with the requirements of Chapter 6: Concrete Layers, Part A or B as may be prescribed.

Section 7.3 Part A Specifications

A7.3.2 DEFINITIONS

A7.3.3 GENERAL

A7.3.3.1 Quality Plan and Method Statement

A7.3.3.2 Trial sections

A7.3.3.3 Weather limitations

a) Responsibility
b) Rain and hail
c) Cold weather
d) Hot weather
e) Hot and windy weather Nomogram

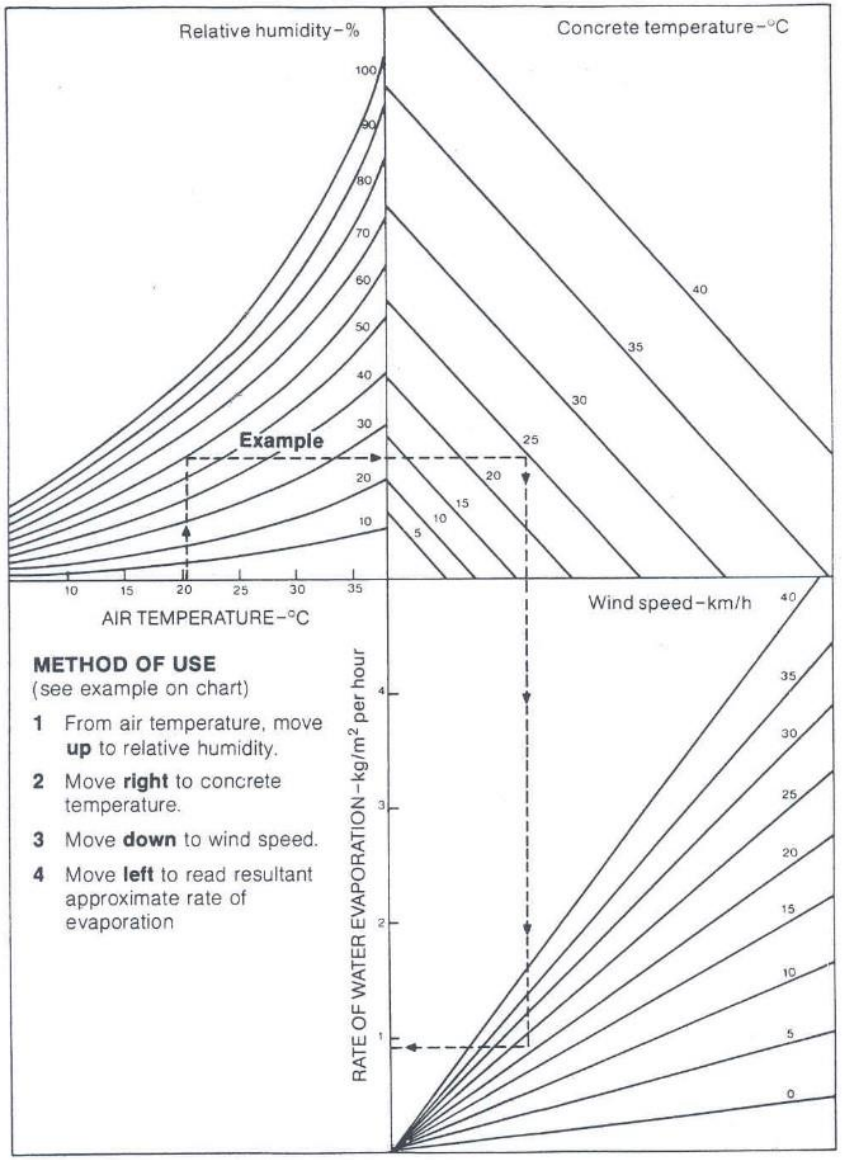

Effect of ambient conditions on rate of evaporation

Section 7.3 Part A Specifications

A7.3.4 DESIGN BY CONTRACTOR/ PERFORMANCE SYSTEMS

A7.3.4.1 Concrete mixes

a) Lean mix concrete layers

The lean mix concrete for use in the underlying subbase layer shall consist of 10 MPa concrete designed in accordance with the relevant requirements listed in Chapter 13.

b) Concrete layers

The Contractor shall design the concrete mixes in accordance with all the requirements as listed in Clause A6.1.4 of Chapter 6 with the exception that, where rapid strength gain is required to permit opening to traffic within any prescribed period, rapid hardening cements/accelerating admixtures may be incorporated. The use of such shall however not absolve the Contractor from ensuring that the concrete can be delivered, placed, consolidated and finished to the specified requirements and with no drying/plastic shrinkage cracking occurring. The mix designs shall be undertaken by an approved laboratory.

c) Hot mix asphalt Sabita Manual 35

d) Stabilised layers Chapter 4 and TRH 13

Section 7.3 Part A Specifications

A7.3.5 MATERIALS

A7.3.5.1 Concrete

As per Clause A6.1.5 in Chapter 6

A7.3.5.2 Hot mix asphalt

As per Clause A9.1.5 of Chapter 9

A7.3.5.3 Stabilised Material

As per Chapter 4

A7.3.5.4 Tie bars, dowels, and reinforcing

As per Clause A6.1.5 in Chapter 6

A7.3.6 CONSTRUCTION EQUIPMENT

Section 7.3 Part A Specifications

A7.3.7 EXECUTION OF THE WORKS

A7.3.7.1 Removal of existing concrete

Where any section of the concrete pavement has to be removed, the whole panel between longitudinal and transverse joints shall be removed. In such cases the concrete shall be removed either over the full length or over the full width of the panel between joints. Where the edge of the section to be removed coincides with an existing joint, the edge shall be accurately demarcated in a straight line and sawn with an approved concrete saw to a depth of at least 50 mm before the removal of the concrete may commence.

Existing concrete may be broken up by the sawing and lifting of panels, or by sawing the boundaries of the area to be removed and breaking up the internal concrete by suitable equipment. Strict control shall be exercised to ensure that the adjacent concrete is not damaged in any way. The Contractor shall repair any damage to the adjacent concrete

Care shall be taken at existing joints to ensure that tie bars or dowels are not damaged or bent so as to render them useless. In the case of continuously reinforced concrete, the concrete shall be removed in such a manner so as to preserve the continuity of the reinforcing steel in all directions.

Broken-up concrete shall be removed to an approved spoil site.

Section 7.3 Part A Specifications

A7.3.7.2 Preparing underlying layers

a) Underlying layers remaining in place

i) Cemented layers

ii) Asphalt layers

iii) Recompaction of existing layers

b) Removal of existing underlying layers

Section 7.3 Part A Specifications

A7.3.7.3 Reinstating underlying layers

a) Gravel layers

b) Stabilised layers

c) Lean mix concrete

d) Hot mixed asphalt

e) Micro surfacing

Section 7.3 Part A Specifications

A7.3.7.4 Reinstatement of tiebars, dowels and reinforcement

a) Tie bars

i) In new concrete. As per Clause A 6.1.7 in Chapter 6

ii) Between existing and new concrete

- Cleaned and straightened.
- If damaged or cut, reinstalled at contractors cost by epoxying in

b) Dowel bars

i) In new concrete. As per Clause A 6.1.7 in Chapter 6

ii) Between existing and new

- If damaged or cut, reinstalled at contractors cost by epoxying in
- Alignment critical

Section 7.3 Part A Specifications

A7.3.7.4 Reinstatement of tiebars, dowels and reinforcement

c) Continuous reinforcing

i) In new concrete. As per Clauses A 6.1.6 to 8 in Chapter 6

ii) In existing concrete

- If damaged, splice at Contractors cost
- If cut and lift-out specified, reinstate to spec

d) Reinforcing mesh

i) In new concrete. As per Clauses A 6.1.6 to 8 in Chapter 6

ii) In existing concrete

- If damaged or cut, reinstalled at contractors cost by epoxying in
- Alignment critical

Section 7.3 Part A Specifications

A7.3.7.5 Replacing concrete

The concrete shall be placed, consolidated and finished in accordance with the requirements as prescribed in Clause B6.1.7 of Chapter 6. No traffic shall be permitted on the concrete until the compressive strength has reached a minimum of 30 MPa and all the joints have been sealed.

A7.3.7.6 Forming joints

All joints shall be formed and sealed as prescribed in Clause A6.1.7 of Chapter 6 and/or Section A7.1 as relevant. All joints shall be sealed before opening to traffic.

A7.3.7.7 Texturing and curing

a) Texturing

After the concrete has been placed and finished the texture shall be formed as prescribed in Clause A6.1.7.3 of Chapter 6. The pattern and depth of texturing shall be as close as possible to that existing on the adjacent existing concrete.

b) Curing

The curing compound shall be applied in accordance to the requirements prescribed in Clause A6.1.7.3 of Chapter 6 immediately after completing the texturing.

Section 7.3 Part A Specifications

A7.3.7.8 WORKMANSHIP

A7.3.7.8.1 General

The completed work shall exhibit no uncontrolled cracking.

A7.3.7.7 Level and Grade

- Where the fresh concrete is a portion of an existing panel the level shall be checked by a 3,0 m straight-edge placed across the existing concrete edges and the level of the fresh concrete shall not deviate by more than ± 3,0 mm from the line of the straight-edge.
- Where complete panels are replaced between existing joints, the concrete shall be finished flush with the adjacent panels and the maximum deviation from the existing longitudinal grade shall not exceed ± 3,0 mm.
- For thin bonded arris and surface repairs the fresh concrete shall be finished flush with the surrounding concrete to within a tolerance of ± 3,0 mm.

A7.3.7.8 Thickness

Where full depth panels or portions thereof, are replaced on top of the existing subbase layers, the nominal thickness of the concrete shall be equal to the nominal thickness of th adjacent concrete pavement.

Section 7.3 Part A Specifications

A7.3.7.8.4 Regularity

Where single concrete panels or portions thereof are replaced between existing panels, no irregularity of more than 3,0 mm shall be measured with a rolling straight-edge or a 3,0 mm long straight-edge laid along the centre line of the road.

A7.3.7.8.5 Testing Frequency

For full-depth repairs the testing frequency for construction tolerances shall be as per the following:

- Surface Levels: 9 Random Control Points per Panel
- Width and Edge Alignment: Each Panel
- Joint Alignment: Each Panel

A7.3.7.8.6 Texture

The average depth of texture shall be between 3,0 and 4,5 mm as prescribed.

Section 7.3 Part B Labour Enhancement

All provisions of Part A apply

Section 7.3 Part C Measurement and Payment

VERY DETAILED

Five pages

Section 7.3 Part D Guarantees and Compliance

No Requirements

Questions?

Chapter 7

Section 7.4 Reinstatement of Slab Support by Grout Injection

- Purpose:
  - Fill voids
  - Re-establish uniform support.
- Voids as a result of:
  - Pumping under traffic
  - Consolidation from overloading
  - Subgrade settlement/ failure

Slab Stabilization/Jacking

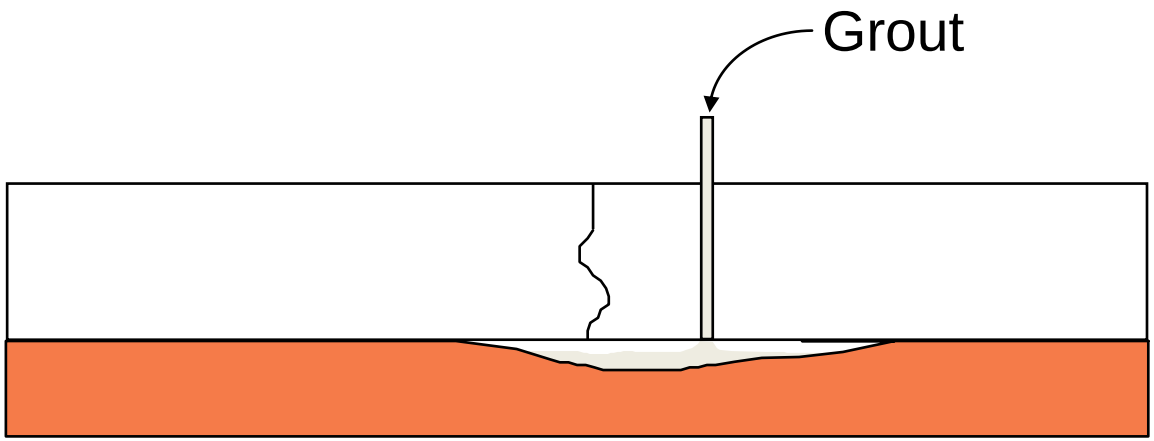

- Fill void not raise slab
- Raise slab if faulted

Section 7.4 Part A Specifications

A7.4.1 SCOPE

This Section covers the work requirements for reinstatement of concrete pavement support by sub-sealing utilising grout injection. It also includes for the jacking of concrete slabs to reinstate riding quality in areas of subgrade settlement and or faulting.

A7.4.2 DEFINITIONS

- **Sub-sealing** - the filling of voids under the concrete pavement as a result of hydraulic erosion or other causes.
- **Slab jacking** - the lifting of panels that have settled in order to reinstate ride quality.

A7.4.3 GENERAL

A7.4.3.1 Weather conditions

Sub sealing or slab jacking shall only be undertaken when the ambient temperature is 5°C and rising, and shall cease when the temperature exceed 30°C.

Slab Support Restoration

- Accurately finding voids
- Performing post-testing

Finding Voids

- Visual inspection
- Deflection measurement

Visual Inspection

- Faulted joints
- Stains from pumping
- Shoulder blow holes
- Corner breaks
- Large shoulder drop-offs
- Depression areas

Deflection Testing

- Static or Dynamic methods
- Use known axle load (80 kN)
- Measure on both sides of joint to compare deflections
- Test when slabs are cool

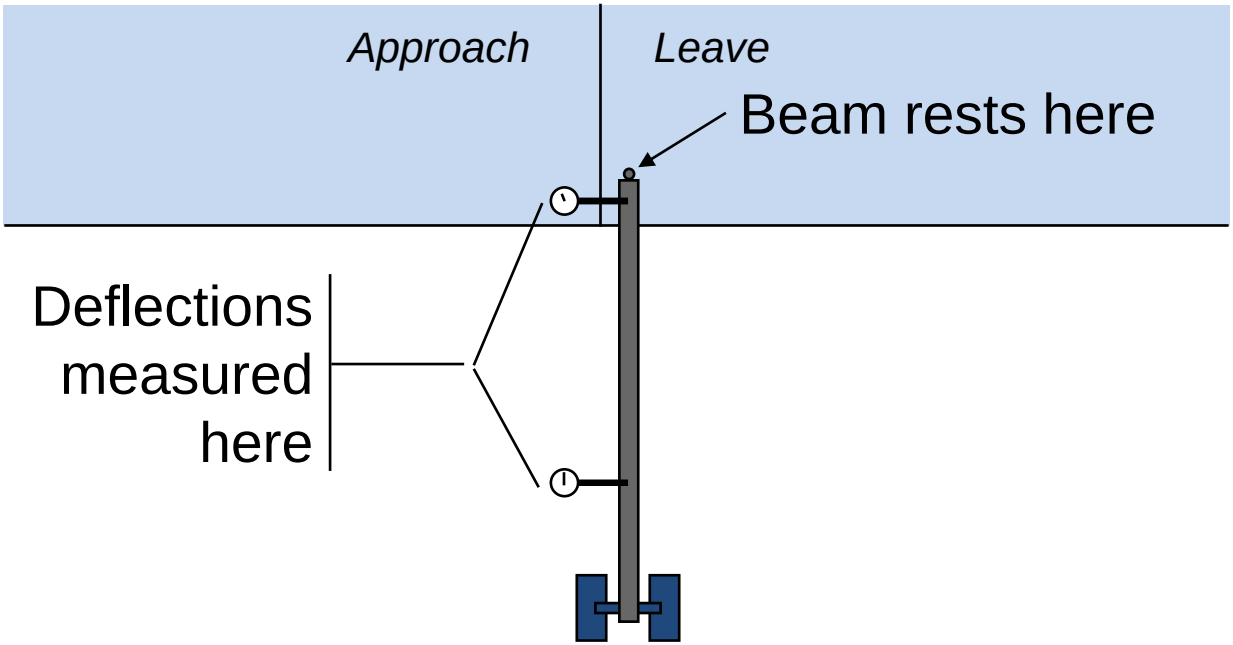

Stabilize if…

Joint Deflection > 0.5-0.6 mm

Section 7.4 Part A Specifications

A7.4.4 DESIGN BY CONTRACTOR/PERFORMANCE BASED

A7.4.4.1 Cement Grout Mixes

a) Grout Material

(i) Cementitious material

- Cement complying with SANS 50197:
- GGBS complying with SANS 55167
- Fly ash complying with SANS 50450
- Silica fume complying with SANS 53263

(ii) Water

Complying with SANS 51008

b) Grout

• 1 part (by volume) Portland cement

• 3 parts (by volume) Pozzolan or fly ash

• Sufficient water to achieve required fluidity

If ambient temperature is below 12°C an accelerator may be used subject to approval of the Engineer.

c) Design process

The Contractor shall submit a design mix for materials and additives including physical and chemical analysis for the pozzolans and tests of the grout slurry by an approved laboratory showing one day, three day, and seven day strengths, flow cone times, shrinkage and expansion observed and time of initial test. The seven day compressive strength shall not be less than 4,0 MPa.

Section 7.4 Part A Specifications

A7.4.4 DESIGN BY CONTRACTOR/PERFORMANCE BASED

c) Fluidity

Fluidity of the grout slurry shall be measured by the Corps of Engineers Flow Cone Method CRD-C 611-80. Time of efflux for pozzolanic grouts shall range from 16 to 26 seconds. A more fluid mix having a flow cone time of efflux of 9 to 15 seconds should be used during the initial injection at each hole. These measurements shall be made not less than twice each day.

c) Grout for sealing of injection holes and slots for load transfer

Injection holes for sub-sealing and slots for load transfer shall be sealed with a cementitious grout as approved by the Engineer.

Section 7.4 Part A Specifications

A7.4.4 DESIGN BY CONTRACTOR/PERFORMANCE BASED

A7.4.4.2 Polyurethane Foam

a) Grout Material

Polyurethane grout shall consist of two chemicals that combine to form a strong lightweight foam-like substance

b) Design process

The Contractor shall submit a design for the foam indicating a density in excess of 64 kg/m3 and a strength in excess of 0,25 MPa.

c) Grout for sealing of injection holes

Injection holes for sub-sealing shall be sealed with a cementitious grout as approved by the Engineer.

Section 7.4 Part A Specifications

A7.4.5 CONSTRUCTION EQUIPMENT

7.4.5.1 Cement Grout

a) Grout plant

The grout plant shall consist of a positive displacement cement injection pump capable of applying 2 MPa pressure, a high-speed colloidal mixing machine and a grout return system. The colloidal mixing machine shall operate at a minimum speed of 800 RPM, maximum speed to 2000 RPM, creating a high-shearing action and subsequent pressure release to produce a homogeneous mixture.

b) Water tanker

If water tanker and pumps are not an integral part of the plant, water shall be supplied from a water truck with adequate capacity and pressure for delivery to the grout plant.

c) Drilling equipment

An air compressor and rock drills capable of drilling 38 to 50 mm diameter holes. The equipment shall be in good condition and operated in such manner that the holes are vertical and not "cut-of-round". Down-feed pressure whether by hand or mechanical means shall not exceed 90 kg maximum downward pressure. Holes shall be drilled in such a manner so as to prevent breakout at the bottom of the pavement.

d) Miscellaneous

.

Section 7.4 Part A Specifications

A7.4.5 CONSTRUCTION EQUIPMENT

7.4.5.2 Polyurethane foam

a) Plant

When using polyurethane foam, all material is stored, proportioned, and blended within a self-contained pumping unit. All handling and usage of these materials should be in accordance with the material manufacturer's instructions and specifications.

b) Drilling equipment

For polyurethane slab stabilization, hand-held electric-pneumatic rock drills are typically used to drill the injection holes. For these procedures, the maximum hole diameter should not exceed 15 mm.

In addition a coring machine shall be provided to take cores through the pavement and to drill pilot holes to prevent breakout on the concrete pavement surface.

c) Transport

Transport required for the transportation of all materials, equipment and personnel required for the sub-sealing of the concrete pavement must comply with all safety requirements and regulations applicable to vehicles operating on public roads.

d) Miscellaneous

Section 7.4 Part A Specifications

A7.4.6 EXECUTION OF THE WORKS

A7.4.6.1 Drilling Holes

Grout holes for injection shall be drilled in a pattern determined by the Engineer in consultation with the Contractor. Holes shall be between 50 mm and 60 mm in diameter, drilled vertically and round and to a depth sufficient to penetrate through the stabilised subbase but not more than 75 mm into the subgrade. Down-feed pressure, whether by hand or mechanical means, shall be drilled in such a manner so as to prevent breakout at the bottom of the concrete pavement.

A7.4.6.2 Washing of holes

Holes shall be briefly washed to create a small cavity to allow for the initial spread of grout.

Injection Hole Pattern

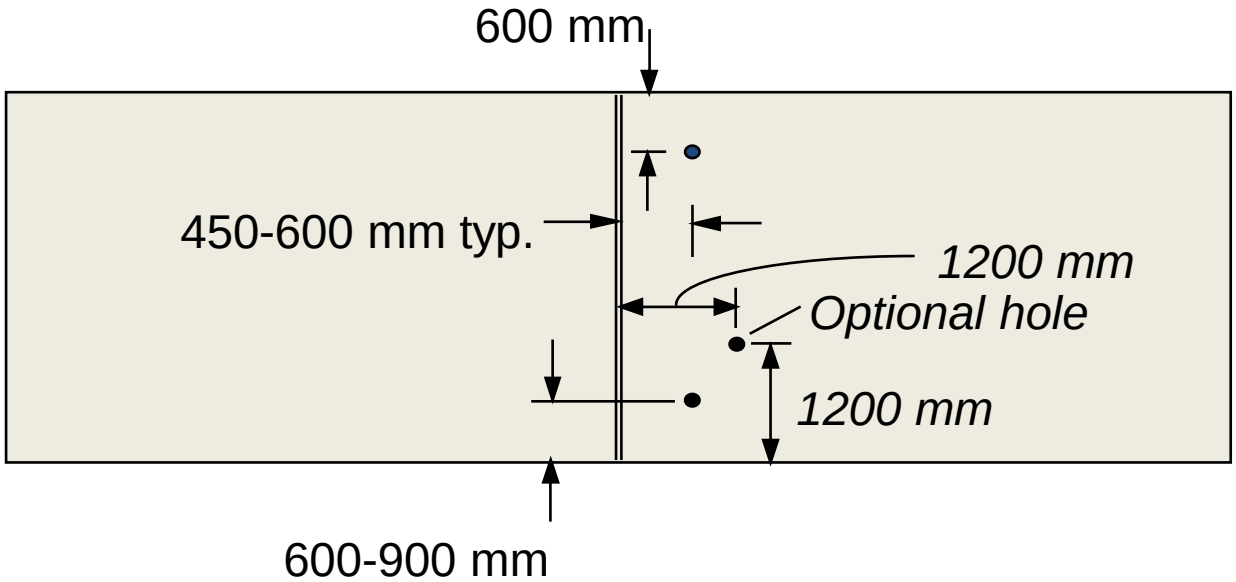

For Voids on Leave Side of Joint or Crack

Injection Hole Pattern

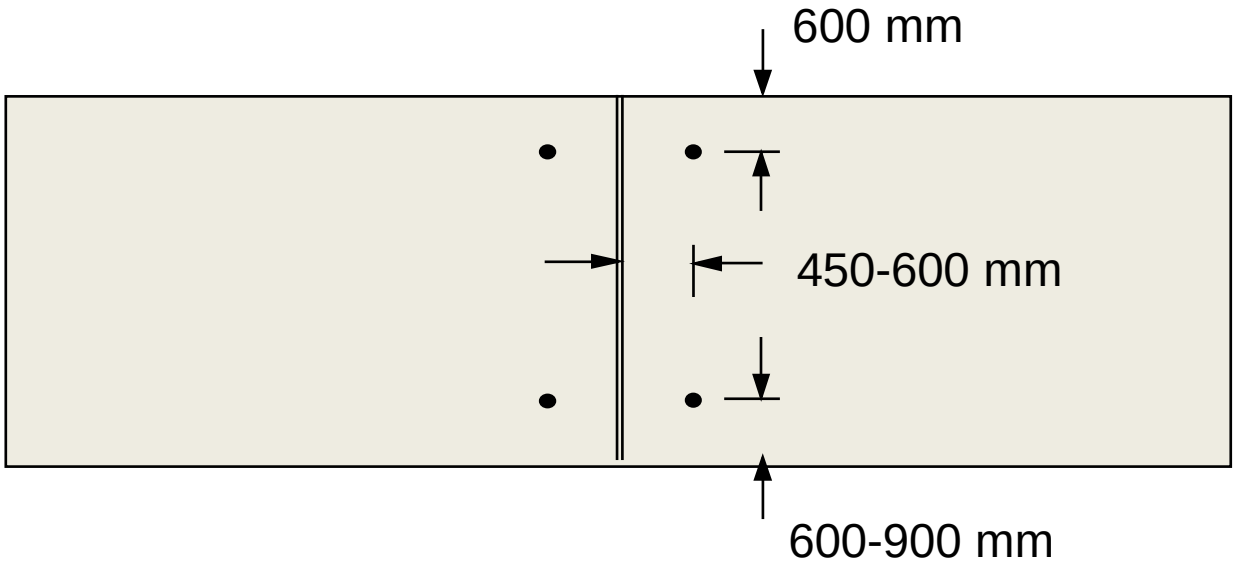

For Voids on Approach and Leave Side of Joint or Crack

8 16 '99

Section 7.4 Part A Specifications

A7.4.6.3 Sub-sealing

The purpose of slab stabilization is to fill existing voids and not to raise the slab. Close inspection is required by the contractor and the inspector during the stabilisation operation, as lifting of the slabs can create additional voids and may lead to slab cracking. The success of the slab stabilisation operations is highly dependent upon the skill of the contractor.

The grout injection should start with a low pumping rate and pressure and should be pumped until one of the following conditions occurs:

• The maximum allowable pressure of 0,69 MPa at the grout plant is obtained. Note that a short surge up to 1,38 MPa can be allowed when starting to pump in order for the grout to penetrate the void structure, if necessary.

• The slab lift exceeds 3,0 mm.

• Grout is observed flowing from adjacent holes, cracks, or joints.

• Grout is being pumped unnecessarily under the shoulder, as indicated by lifting.

• More than about 1 minute has elapsed (any longer than this indicates the grout is flowing into a cavity).

Section 7.4 Part A Specifications

A7.4.6.3 Sub-sealing (cont)

The uplift for any given slab corner should be monitored using a modified Benkelman Beam or other similar device that is capable of detecting 0,025 mm of uplift movement.

The effectiveness of slab stabilization can be determined only by monitoring the subsequent performance of the pavement. The best early indication of effectiveness is obtained by measuring slab deflections before and after grouting to determine if the magnitude of the deflection has been significantly reduced by the process. If the retesting still indicates a loss of support, the slabs should be regrouted using new drilled holes. If voids are still present after three attempts to stabilize the slab, other methods of repair should be considered (e.g., full-depth repair).

Section 7.4 Part A Specifications

A7.4.6.4 Slab-jacking

Procedures must be developed to monitor the raising of the slab and to ensure that the profile meets the desired grade. The taut stringline method is an excellent way to not only control the pumping sequence, but also to achieve the proper grade.

In the stringline method, small wooden blocks, 19 mm (0,75 in) high, are set on the pavement surface along the outer and inner edges and a stringline is secured at least 3,0 m (10 ft) from each end of the depression. As material pumping proceeds, the exact amount of rise at each point within the sag can be observed, allowing the pumping at specific holes to be carefully controlled. This method can consistently achieve profiles within tolerances of 6,0- to 9,0 mm (0,25- to 0,38 in).

- After all preliminary work has been completed (holes drilled, relief opening cut if needed), the pavement is ready to be raised. The slab must be raised only a very small amount at each hole at a time. A good rule is not to raise a slab more than 6,0 mm (0,25 in) while pumping in any one hole. No portion of the slab should be more than 6,0 mm (0,25 in) higher than any other part of the slab (or an adjacent slab) at any time. The entire working slab and all those adjacent to it must be kept in the same plane, within 6,0 mm (0,25 in), throughout the entire operation to avoid cracking.
-

Section 7.4 Part A Specifications

A7.4.6.4 Slab-jacking (cont)

• Pumping should be done over the entire section so that no great strain is developed at any one place. If, for example, pumping was started at either end of a dip, the tension on the top surface will be increased, and the slab will undoubtedly crack. However, if pumping is started at the middle where the tension is on the lower surface, lifting will tend to reduce it, and the slab can be raised an appreciable amount without any damage. As the section is brought back to its original profile, the pumping is extended farther and farther in either direction until the entire dip is at the desired elevation.

• Care must be taken not to flatten the middle out completely. This will cause a sharp bend and will cause cracking. The middle section naturally must be raised faster than the ends of the dip, but lifting should be conducted in such a manner as to avoid sharp bends

Example Grout Injection Pattern

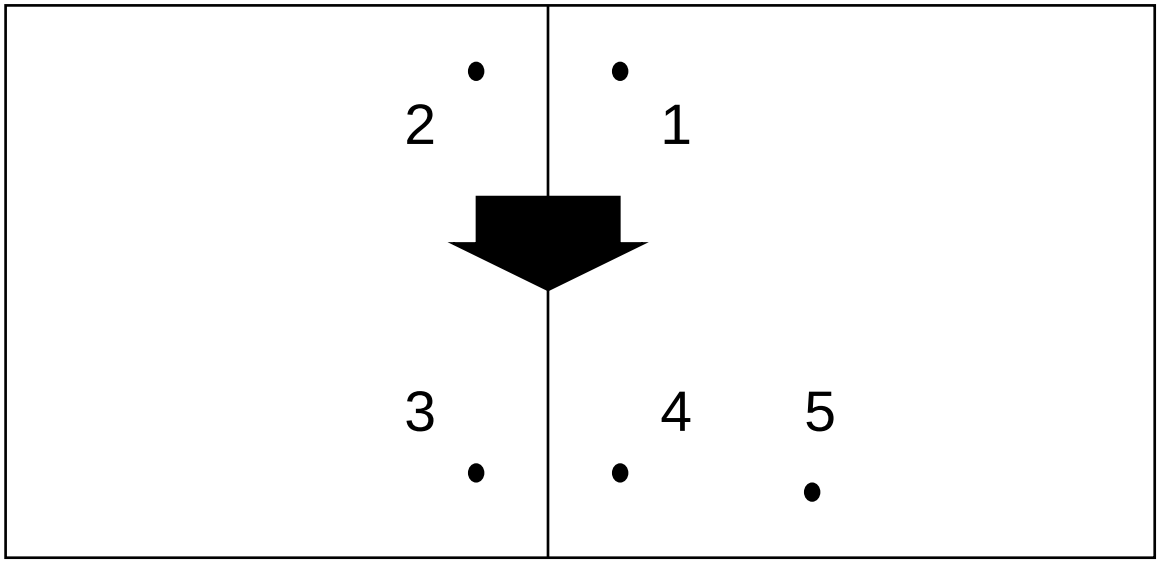

Push any underlying water out toward shoulders

Stop Injection When

- The slab begins to rise /or required lift is achieved (large lifts may require multiple operation)
- Grout no longer pumps below the maximum allowable pressure
- You see grout flowing up through adjacent holes

Section 7.4 Part A Specifications

7.4.6.4 Sealing of injection holes

After grouting has been completed at any one hole, the packer (expanding rubber used to seal the open space between the grout injection pipe and the hole) shall be removed and the hole plugged immediately with a tapered wooden plug. These plugs are only temporary and can be removed once the grout has set sufficiently to prevent back pressure from forcing the grout through the hole. Each hole must be permanently sealed flush with the pavement surface with a cementitious grout or other material approved by the Engineer.

A7.4.6.5 Loss of grout

Excessive loss of grout during the sub-sealing and slab-jacking operations through other injection holes, joints and cracks or the sides of the pavement shall not be paid for.

A7.4.6.6 Unanticipated conditions

In the event of the Engineer determines that continued grout injection at any specific location due to major voids is no longer economically feasible, he should direct the Contractor to cease grout injection at the location. The Contractor will be paid at the unit price for the material used up to that point.

Section 7.4 Part A Specifications

A7.4.6.7 Changed conditions

The Engineer, at his discretion, may delete any location or may add a new location to be sub-sealed or slab-jacked (raised). Variation in the plan quantity at any specific location will not be considered cause for renegotiation of the unit prices.

A7.4.6.8 Finishing

All loose concrete, joint filler or grout accidentally or otherwise spilled on the surface of the concrete pavement or on the adjoining gravel shoulder/median and any other construction waste material shall be removed and the surrounding areas shall be left in a neat and orderly condition by the Contractor prior to final acceptance of the work.

Section 7.4 Part A Specifications

A7.4.7 WORKMANSHIP

A7.4.7.1 Level and Grade

Where the fresh concrete is a portion of an existing panel the level shall be checked by a 3,0 m straight-edge placed across the existing concrete edges and the level of the fresh concrete shall not deviate by more than ± 3,0 mm from the line of the straight-edge.

The concrete shall be finished flush with the adjacent panels and the maximum deviation from the existing longitudinal grade shall not exceed ± 3,0 mm.

For thin bonded arris and surface repairs the fresh concrete shall be finished flush with the surrounding concrete to within a tolerance of ± 3,0 mm.

A7.4.7.2 Thickness

Where full depth panels or portions thereof, are replaced on top of the existing subbase layers, the nominal thickness of the concrete shall be equal to the nominal thickness of the adjacent concrete pavement.

Section 7.4 Part A Specifications

A7.4.7 WORKMANSHIP

A7.4.7.3 Surface Regularity

Where single concrete panels or portions thereof are replaced between existing panels, no irregularity of more than 3,0 mm shall be measured with a rolling straight-edge or a 3,0 mm long straight-edge laid along the centre line of the road.

A7.4.7.4 Testing frequency

For full-depth repairs the testing frequency for construction tolerances shall be as per the following:

- Surface Levels: 9 Random Control Points per Panel
- Width and Edge Alignment: Each Panel
- Joint Alignment: Each Panel

Section 7.4 Part B Labour Enhancement

All provisions of Part A apply

Section 7.4 Part C Measurement and Payment

C7.4.1 Sub-sealing of the concrete pavement number of 50 kg cement pockets

Polyurethane foam ????????

Section 7.4 Part D Guarantees and Compliance

No Requirements

Questions?

Chapter 7

Section 7.5 Reinstatement of Riding Quality

Section 7.5 Part A Specifications

A7.5.1 SCOPE

This Section covers the work required to reinstate the smoothness/riding quality of concrete pavements.

A7.5.2 DEFINITIONS

Smoothness/riding quality – as measured by appropriate methods depending on the area/s being assessed, and may include:

- 3,0 m straight edge
- Rolling straight edge
- Direct Contact Roughness Measuring Devices
- High Speed Inertial Non-Contact Laser Profilometers

A7.5.3 GENERAL

In this Section, distinction is made as follows:

- Work required on newly placed concrete as a result of poor workmanship not meeting the required specifications
- Work required as a result of deficiencies in the existing concrete surface

In the case of poor workmanship, no payment for this work, including traffic accommodation and any additional riding quality measurements ordered by the Engineer, shall be applicable.

Section 7.5 Part A Specifications

A7.5.4 DESIGN BY THE CONTRACTOR / PERFORMANCE BASED SYSTEMS

Not applicable

A7.5.5 MATERIALS

Not applicable

A7.5.6 CONSTRUCTION EQUIPMENT

The grinding/planing equipment shall be appropriate for degree of smoothening and surface area to be treated.

Section 7.5 Part A Specifications

A7.5.7 EXECUTION OF THE WORKS

A7.5.7.1 Areas to be treated as a result of poor workmanship in new concrete

Where the smoothness of newly placed concrete does not meet the relevant specified requirements, the Contractor shall grind or plane the surface utilising appropriate equipment. The surface texture shall then be reinstated to the specified depth of 2,0 to 4,0 mm. If the grinding is carried out with 14 days of initial placing, new curing compound shall be applied as prescribed in Clause A7.3.7.7.

The areas to be planed shall be identified by the Contractor and no payment shall be applicable for these operations.

A7.5.7.2 Areas to be treated as a result of smoothness deficiencies in the existing concrete.

Where the smoothness of the existing surface is poor as a result of settlement, faulting or any other reason, the affected areas shall be planed or ground. The areas to be treated and level of smoothness required shall be as specified in the Contract Documentation and as directed by the Engineer.

Payment for grinding shall be in accordance with Part C: Measurement and Payment.

After the completion of the grinding/planing the treated areas shall be retextured in accordance with Clause A7.6.7.

Section 7.5 Part A Specifications

A7.5.8 WORKMANSHIP

After completion of the grinding/planing the finished surface shall comply with all the smoothness requirements as specified in Clause A6.1.8 of Chapter 6 as relevant, or any other requirement as may be specified in the Contract Documentation.

Diamond Grinding

- Purpose
  - Smooth the surface
  - Re-establish skid resistance
  - Correct cross fall / drainage
- Used for:
  - Faulted joints
  - Wheel track wear
  - Drainage improvements
  - Polished pavement

Basic Components

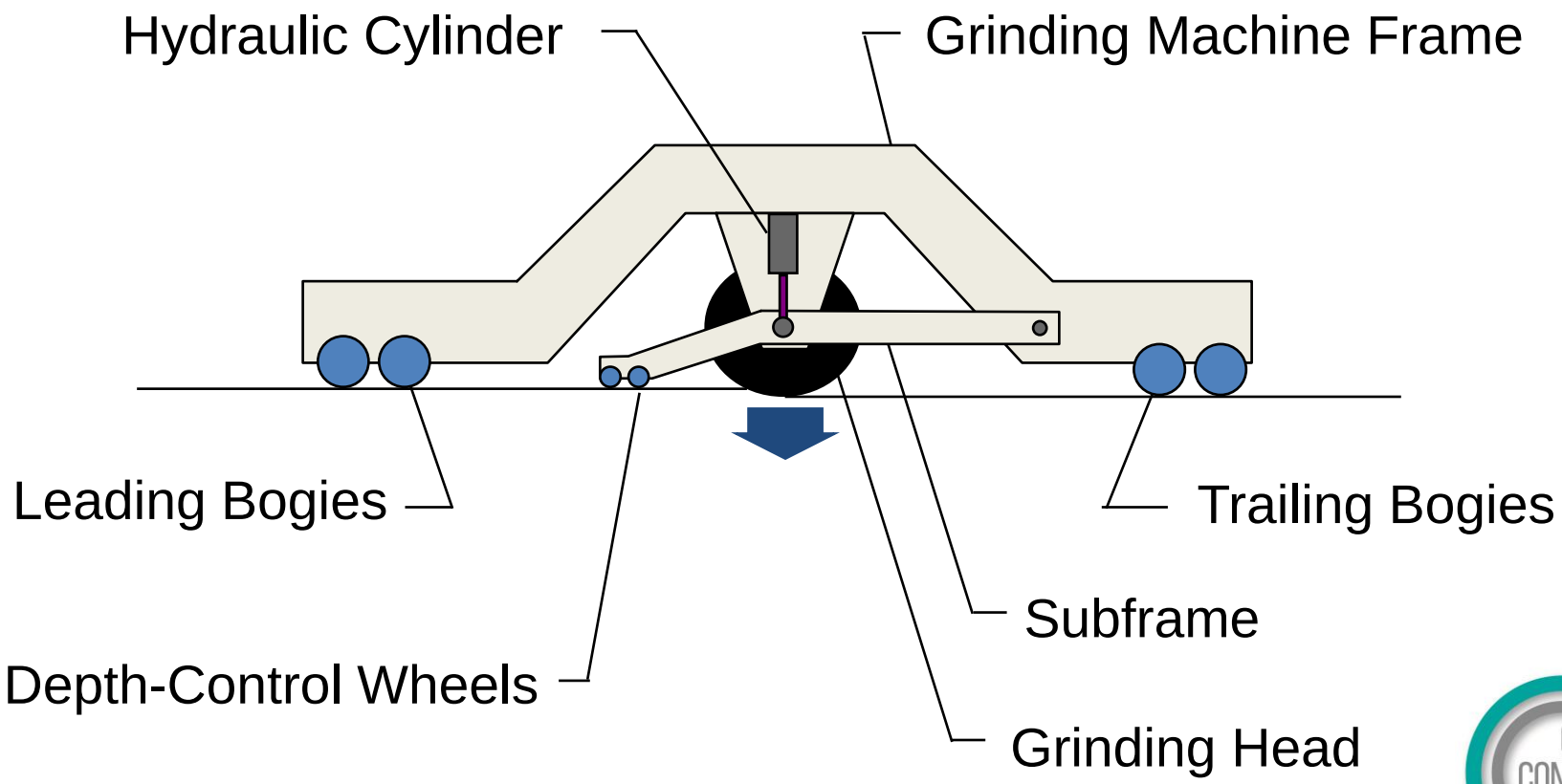

MU. INC.
TARGET
25
PRM3804

Setting up Grinding Head

- Select blade spacing based on aggregate hardness
  - Hard (close spacing)
  - Soft (wide spacing)
- Do not line up blade segments to avoid vibration

Section 7.5 Part B Labour Enhancement

All provisions of Part A apply

Section 7.5 Part C Measurement and Payment

C7.5.1 Grinding or planing of existing concrete pavement surfaces square metre (m^2)

Section 7.5 Part D Guarantees and Compliance

No Requirements

Questions?

Chapter 7

Section 7.6 Reinstatement of Surface Texture

Section 7.6 Part A Specifications

A7.6.1 SCOPE

This Section covers all work in connection with the retexturing of a concrete pavement surface by means of grooving the concrete surface in the transverse direction perpendicular to the centre line of the road.

A7.6.2 DEFINITIONS

Texture/mean profile depth – consisting of randomly spaced grooves formed in fresh concrete or sawn into hardened concrete normally 3,0 to 5,0 mm in depth.

A7.6.3 GENERAL

In this Section, distinction is made as follows:

- Work required on newly placed concrete as a result of poor workmanship not meeting the required specifications

- Work required as a result of deficiencies in the existing concrete surface

- In the case of poor workmanship, no payment for this work, including traffic accommodation and any additional texture depth measurements required, shall be applicable.

Texture

Section 7.6 Part A Specifications

A7.6.4 DESIGN BY THE CONTRACTOR / PERFORMANCE BASED SYSTEMS

Not applicable

A7.6.5 MATERIALS

Not applicable

A7.6.6 CONSTRUCTION EQUIPMENT

Self-propelled machines with multi-blade arbors utilising diamond blades built for grinding and/or retexturing purposes. Each machine is to be equipped with a depth control device to ensure that the grooving depth is maintained, as well as a device to control the alignment. Governing machine speed is required to maintain an even depth.

The sawing equipment shall be appropriate for the depth of texturing required and surface area to be treated. The blades utilised shall be 3,0 mm in thickness and so configured so as to provide grooves at random spacing 12 to 25 mm apart.

Section 7.6 Part A Specifications

A7.6.7 EXECUTION OF THE WORKS

A7.6.7.1 Areas to be treated as a result of poor workmanship in new concrete

Where the texture depth of newly placed concrete is too shallow or irregular, and does not meet the relevant specified requirements, the Contractor shall saw grooves into the pavement surface utilising appropriate equipment. The surface texture shall then be reinstated to the specified depth of 3,0 to 5,0 mm. If the texture sawing is carried out on the surface within 14 days of initial placing, new curing compound shall be applied as prescribed in Clause A7.3.7.7. No payment shall be applicable for these operations.

A7.6.7.2 Areas to be treated as a result of texture deficiencies in the existing concrete.

Where the texture of the existing surface is inadequate as a result of abrasion, or any other reason, the identified areas shall be retextured to meet the required tolerances as specified. The areas to be treated and texture depth required shall be as specified in the Contract Documentation and as directed by the Engineer.

Payment for retexturing shall be in accordance with Part C: Measurement and Payment.

Section 7.6 Part A Specifications

A7.6.7.3 General Requirements

All residue or slurry resulting from the texturing operation be removed continuously. The pavement shall be left in a clean washed condition immediately after the operation and no slurry shall be allowed to flow over lanes open to traffic, or into the drainage system

In order to improve the surface drainage texturing shall be done up to the edge of the pavement to enable surface water to run off the pavement completely.

A guide line shall be required to be set at the start of each section to ensure that grooves are perpendicular to the centre line of the road. Where horizontal curves are encountered it is necessary to set out guide wires at 2,0 m intervals.

A7.6.8 WORKMANSHIP

The average depth of the grooves, as measured with a tyre tread depth gauge, shall be 4,0 mm and within the range of 3,0 to 5,0 mm and at a random spacing between 12 and 25 mm.

A minimum of 3 measurements per lane at random positions will be taken with a digital calliper at hourly intervals. The average depth, standard deviation and coefficient of variation for every sample will be taken.

Allowable tolerances shall be as follows:

- Groove width: 3,5 mm +-0,5 mm
- Groove depth: 4,5 mm +-1,5 mm

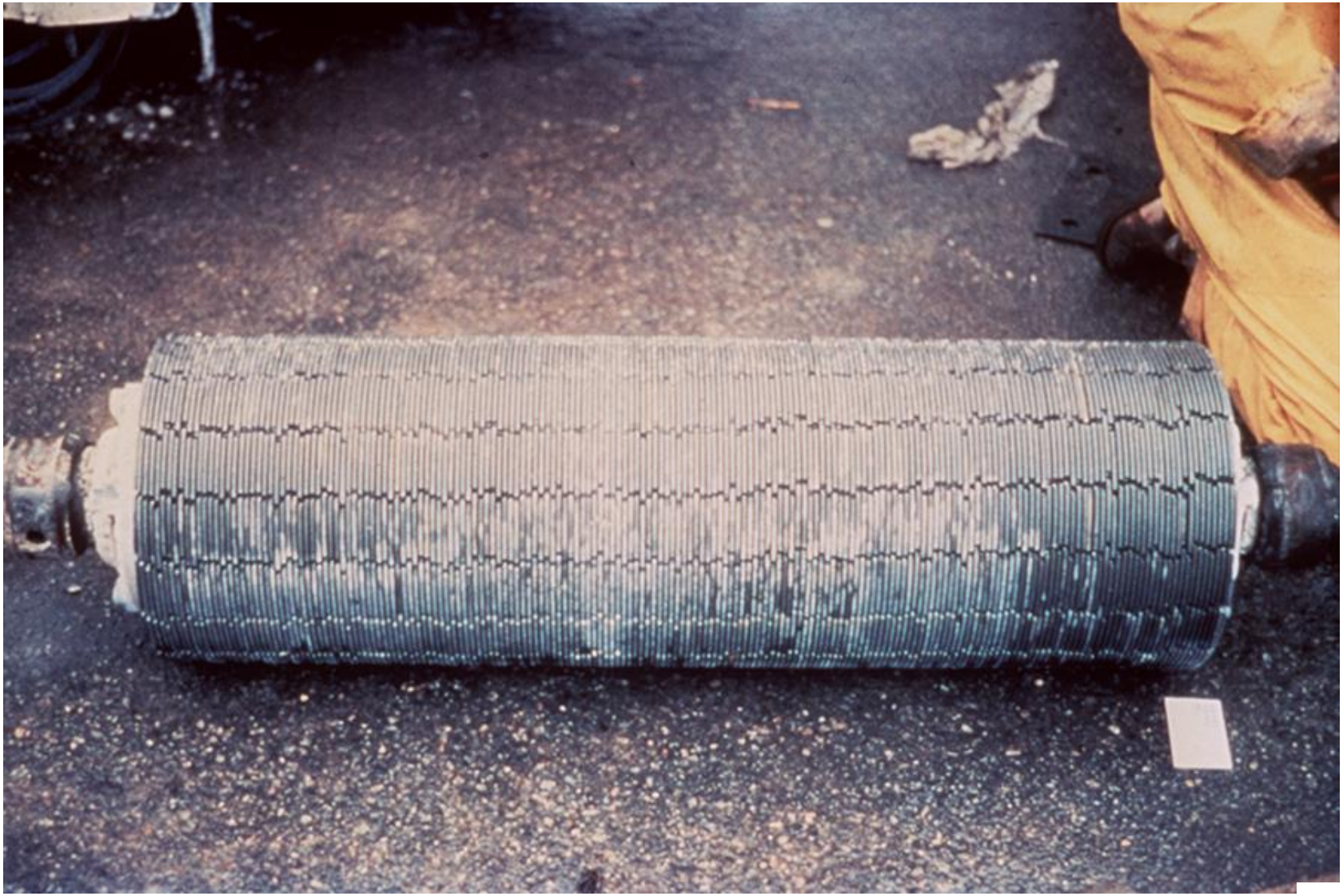

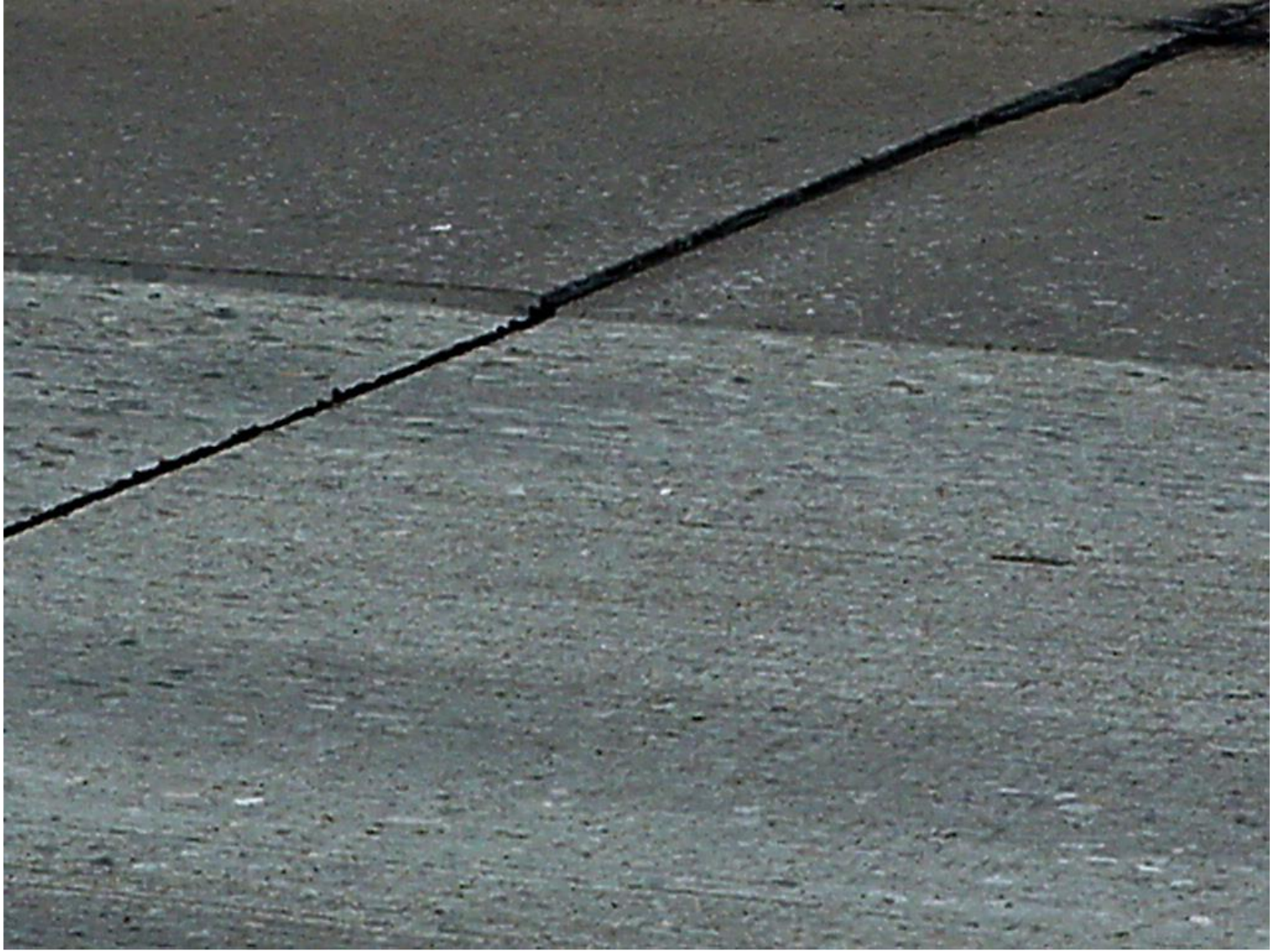

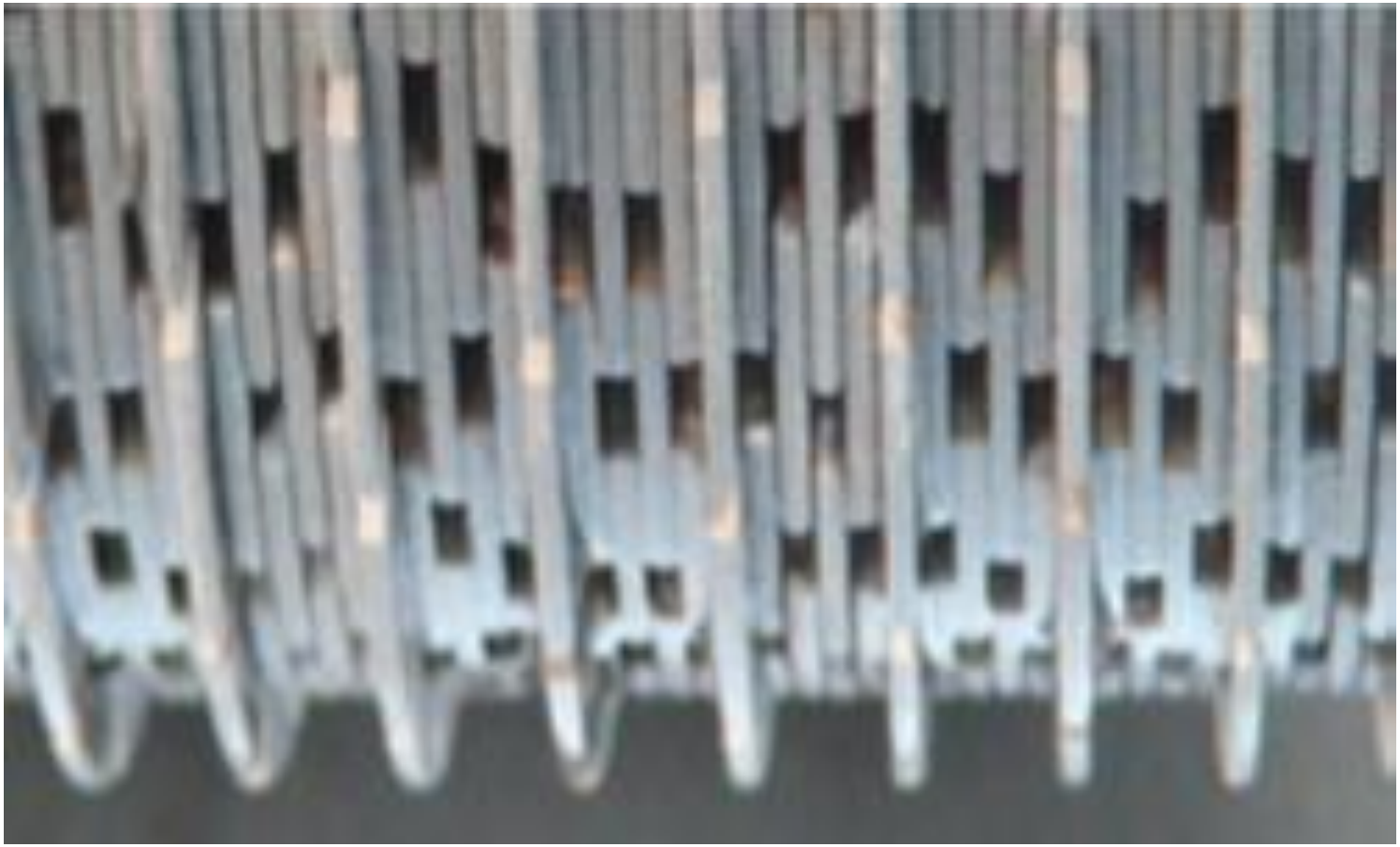

Section 7.6 Part B Labour Enhancement

All provisions of Part A apply

Section 7.6 Part C Measurement and Payment

C7.6.1 Retexturing of concrete surfaces square metre (m^2)

Section 7.6 Part D Guarantees and Compliance

No Requirements

Questions?

Thank you