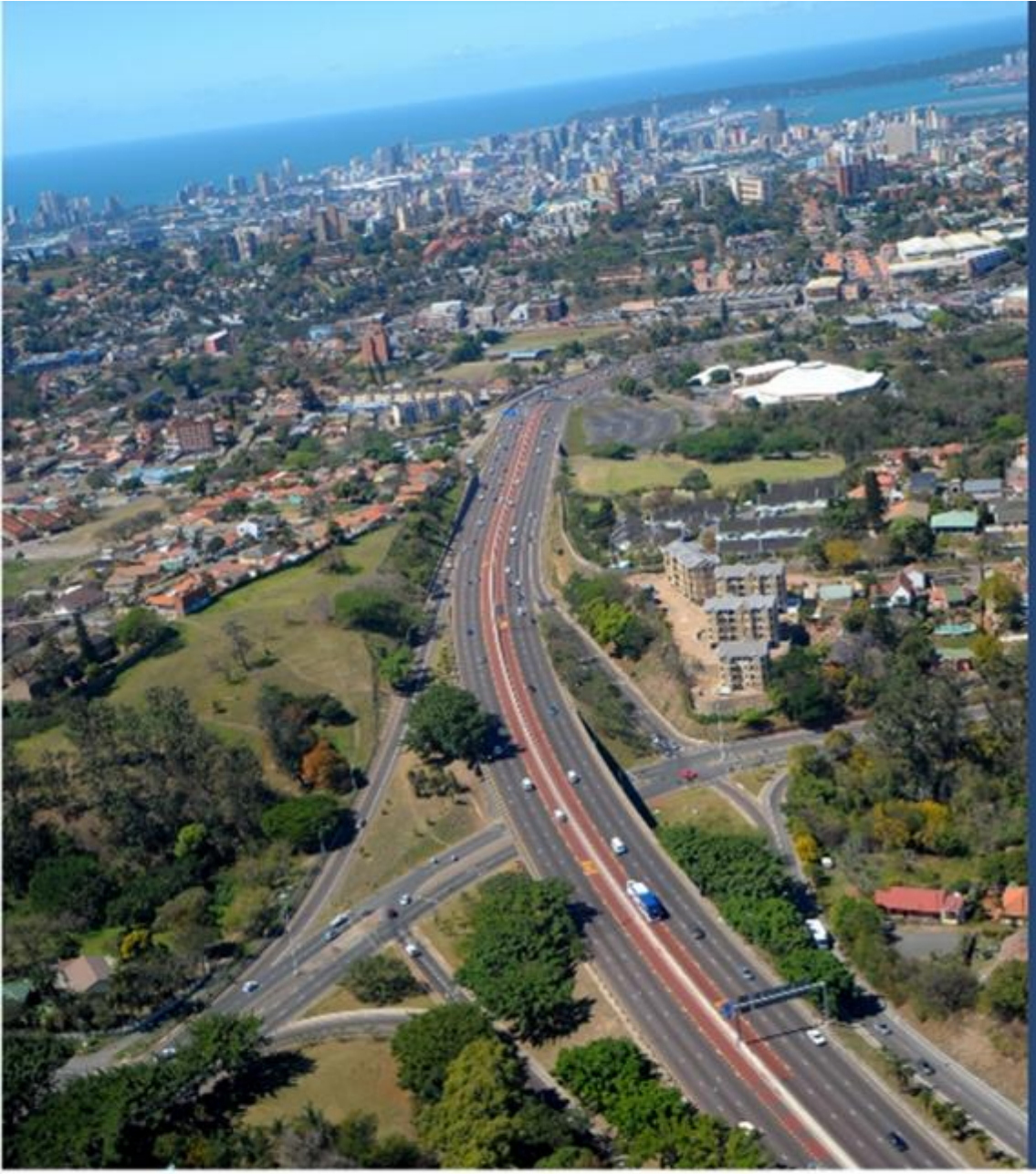

SARF

better roads

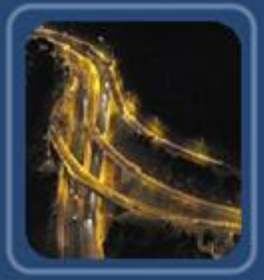

South African Road Federation

12.12
Construction Dewatering

Presented by Louis Melis

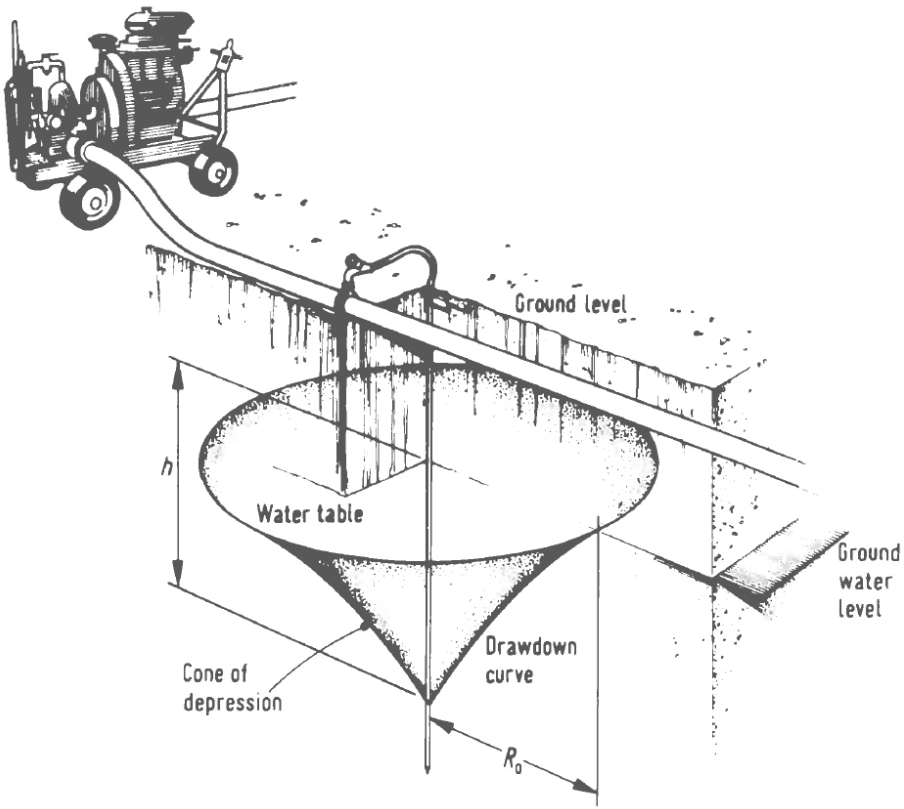

Figure 12 *Cone of depression resulting from drawdown*

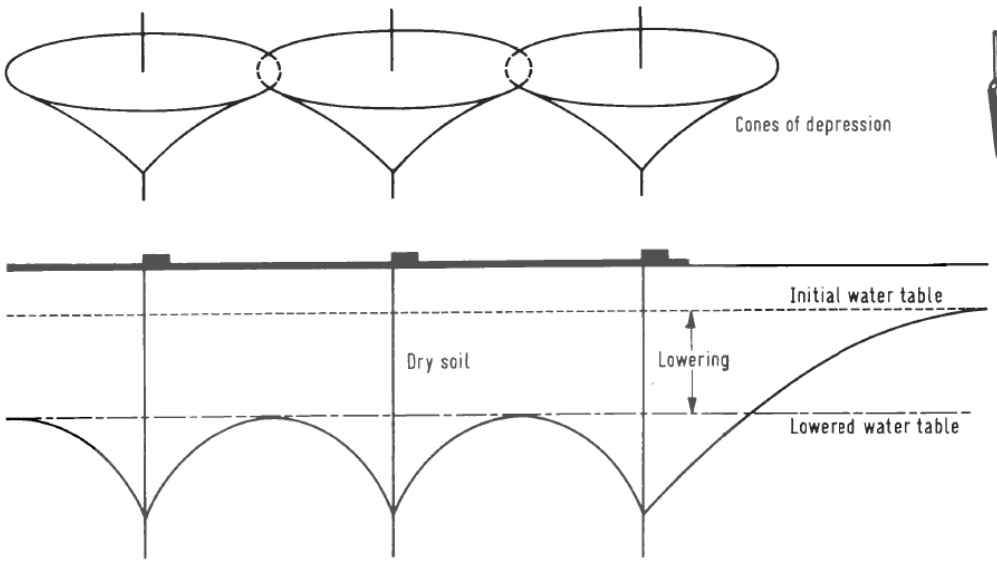

Figure 39 *Cones of depression*

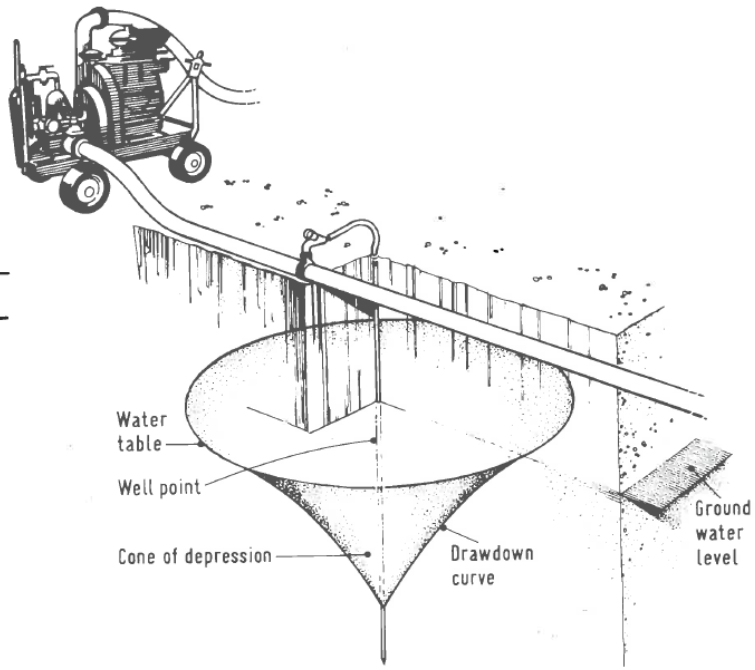

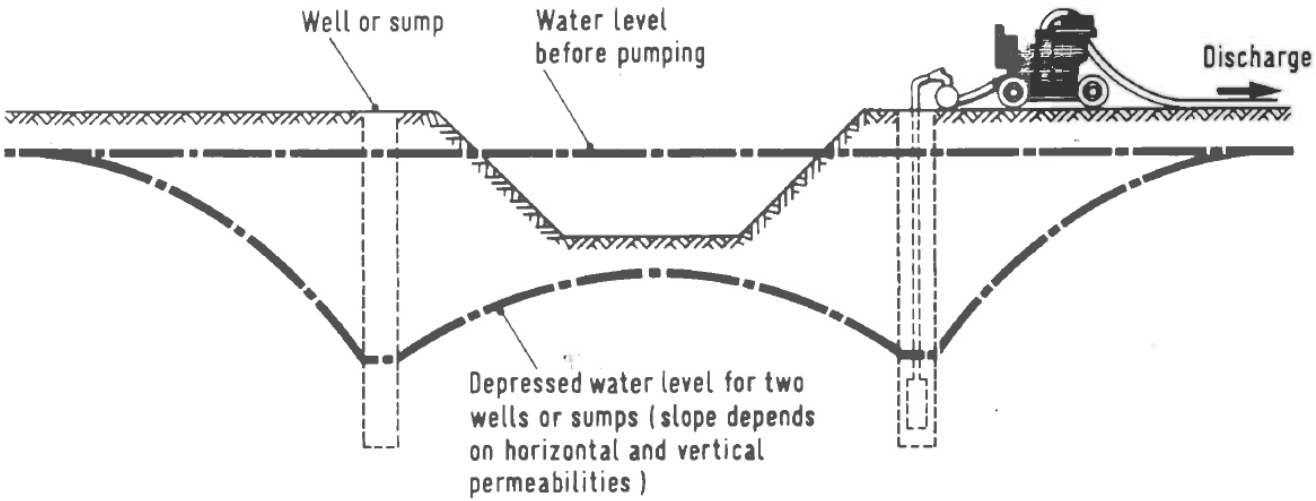

Figure 40 *Pumping from two wells or sumps*

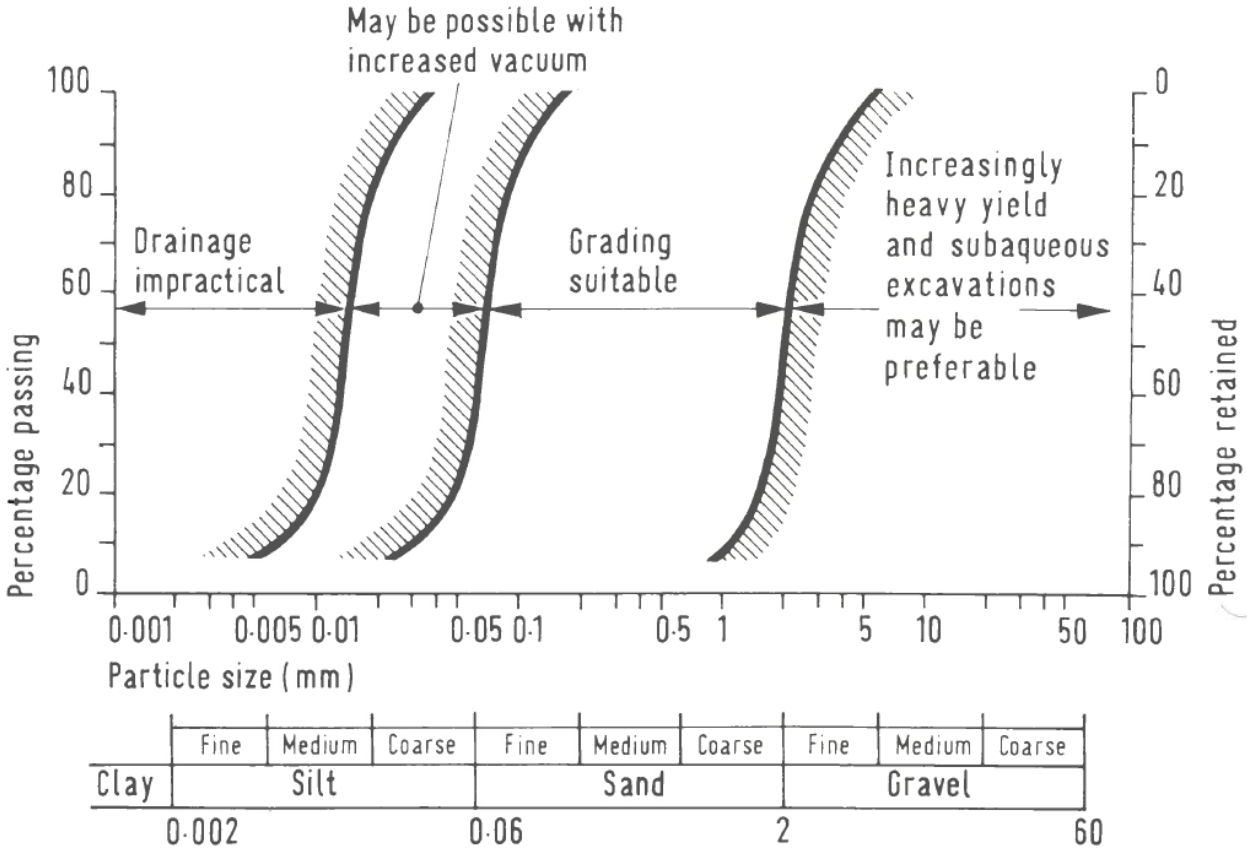

Figure 41 *Approximate grading limits suitable for wellpoint dewatering. Note: system must be hydraulically and pneumatically efficient.*

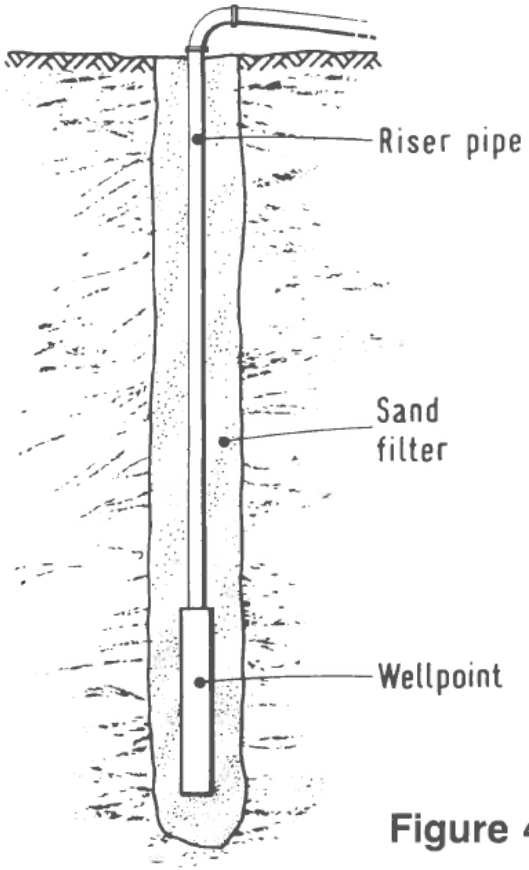

Figure 44 *Sanding-in*

Figure 45 *Standard wellpoint*

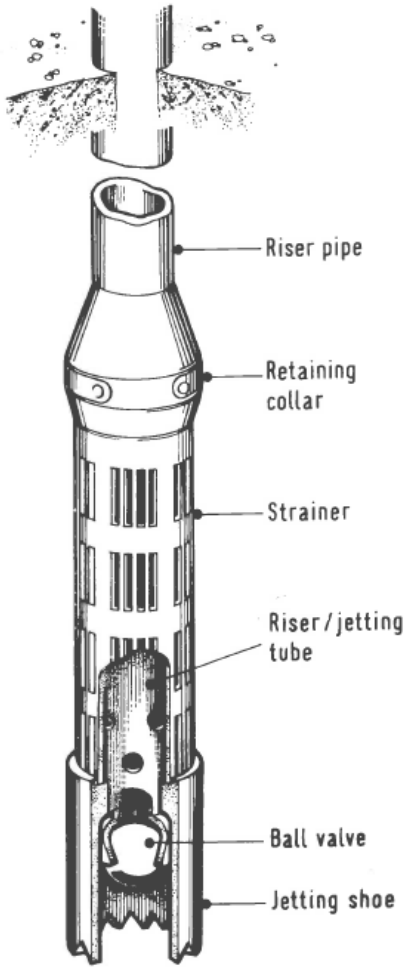

COTO 12.12 CONSTRUCTION DEWATERING

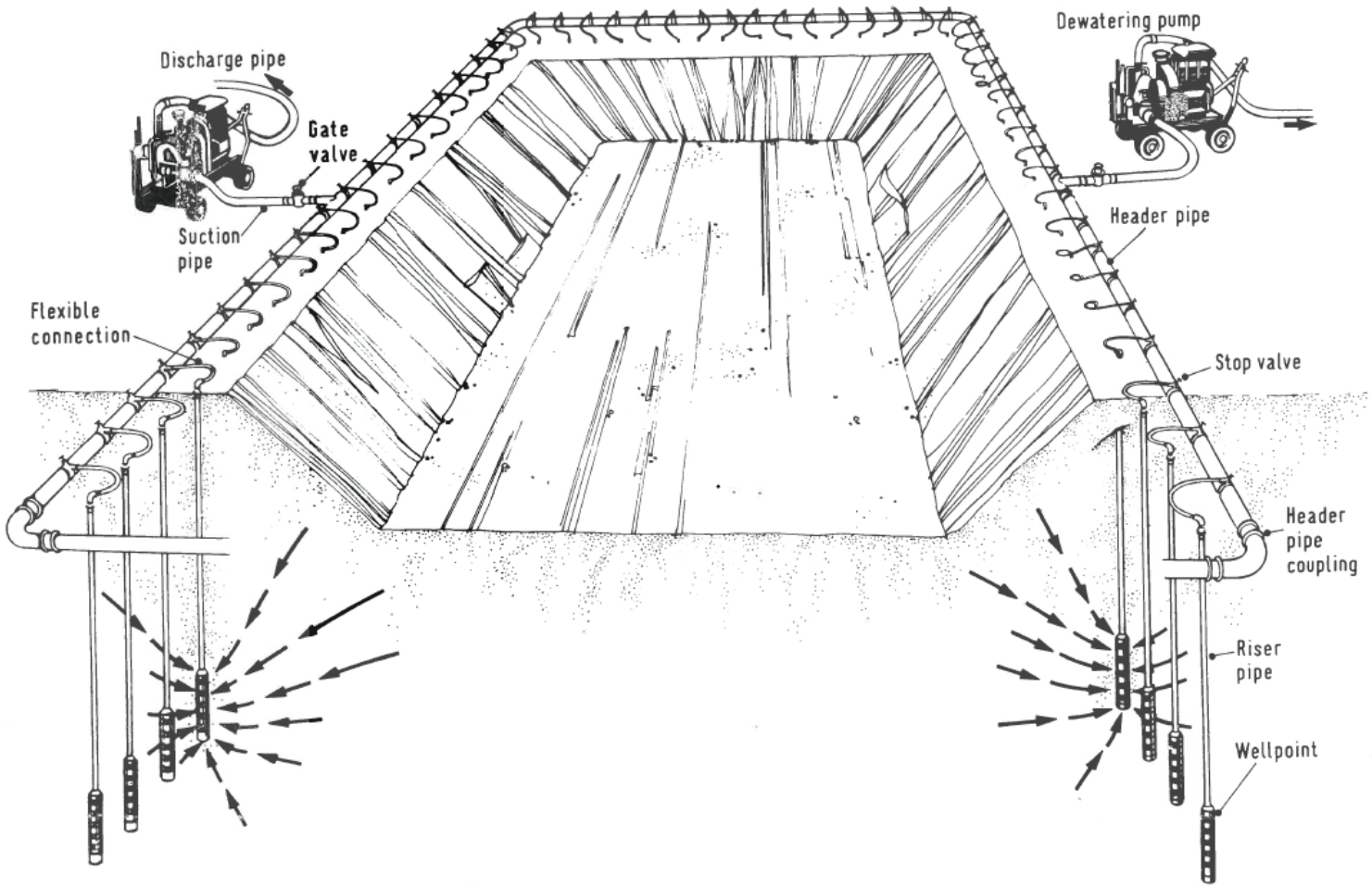

Figure 49 *Wellpoint dewatering system components*

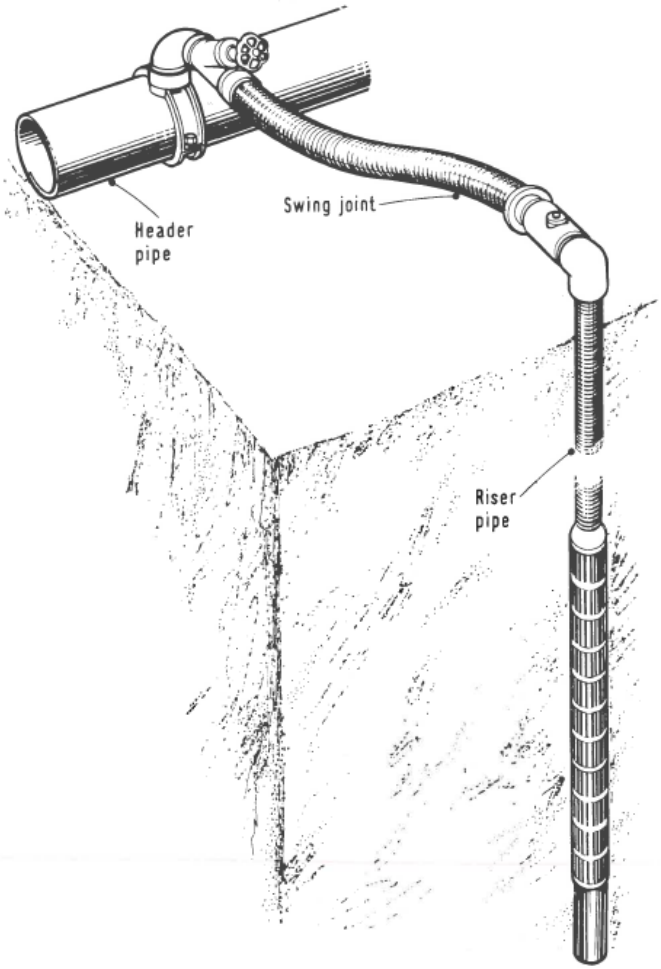

Figure 47 *Arrangement of swing joint pipe connection to header*

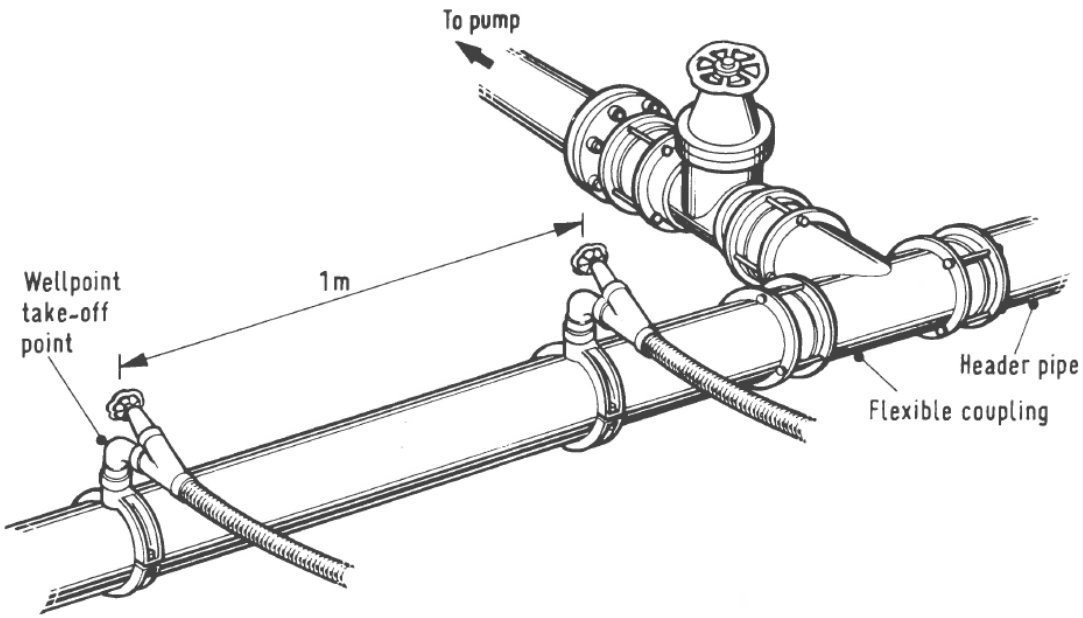

Figure 48 *Header pipe fittings*

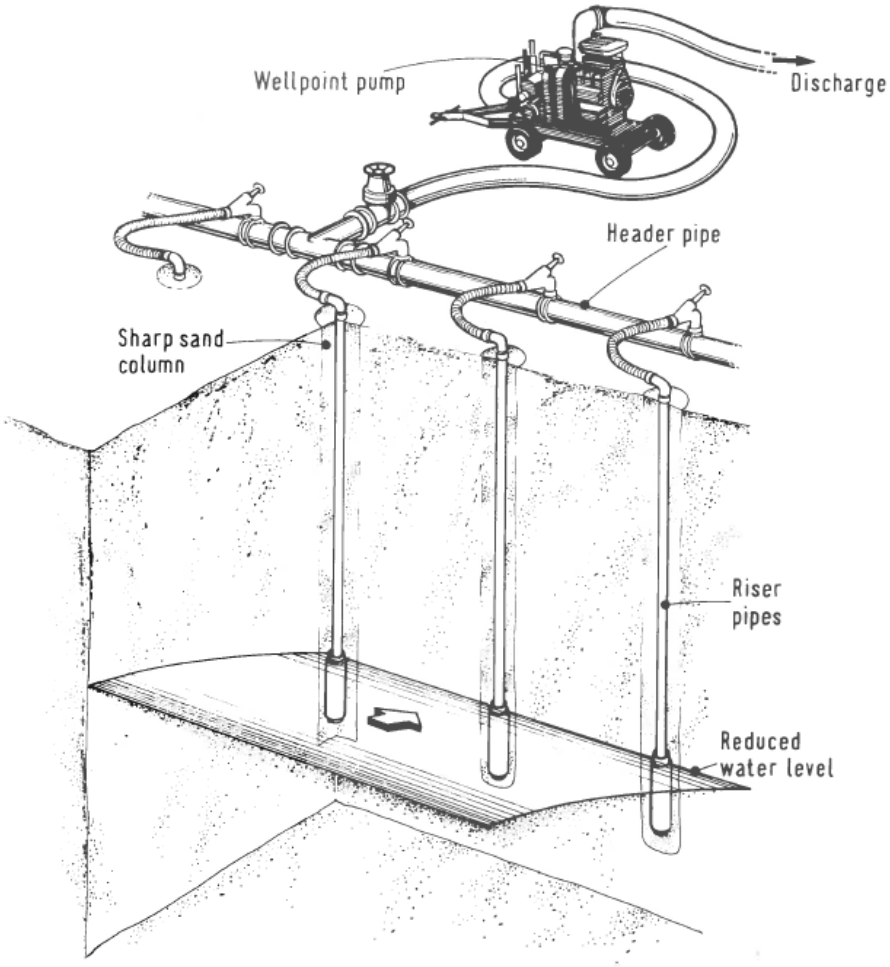

Figure 50 *Vertical wellpoint system for trench excavation*

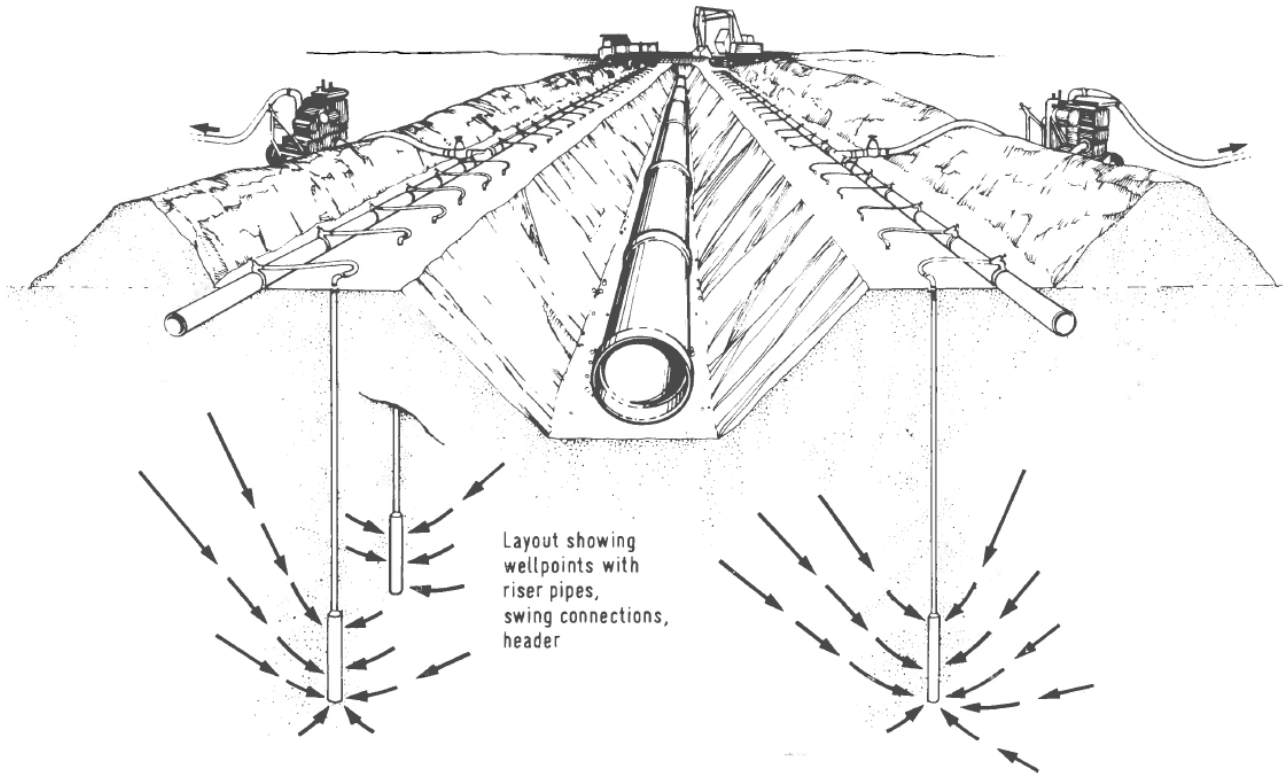

Figure 58 *Progressive wellpoint system: general layout*

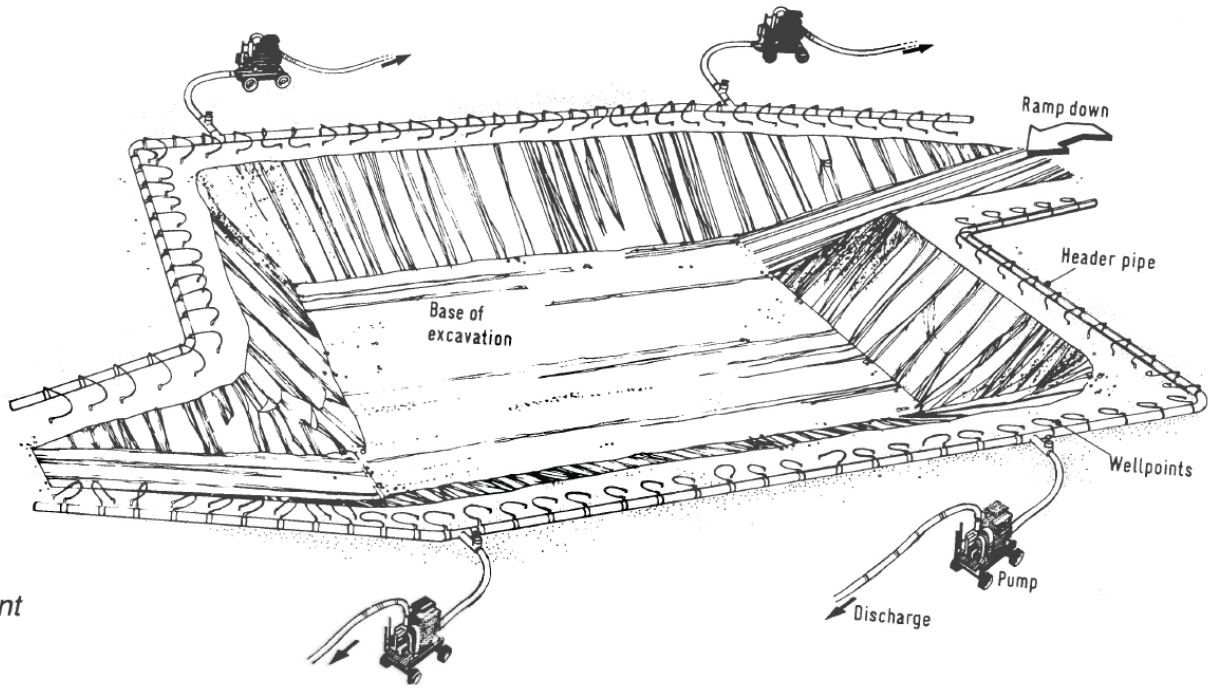

Figure 59 *Wellpoint arrangement for open excavations*

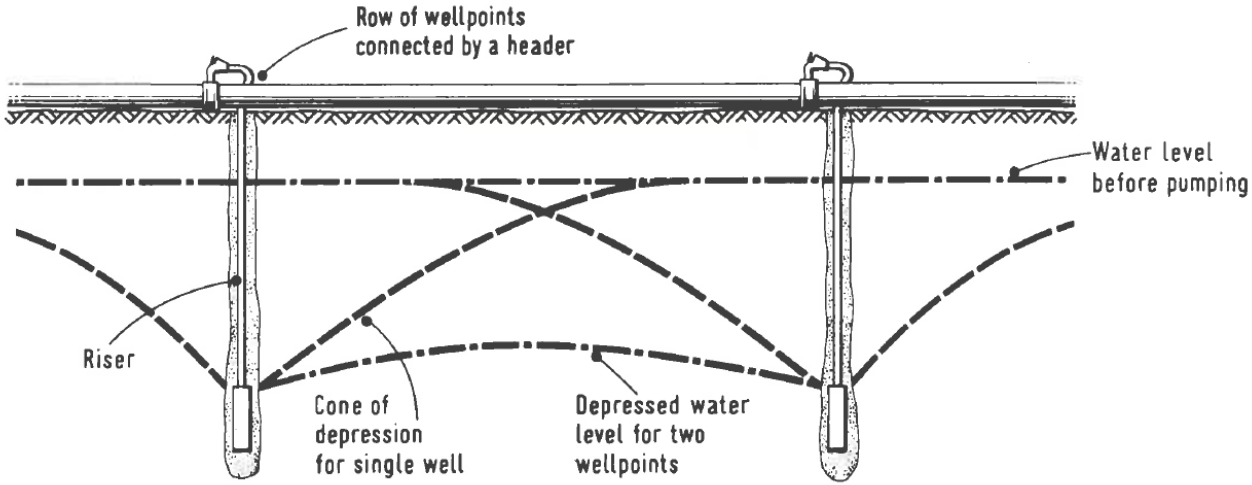

Figure 60 *Effect on cone of depression achieved by close wellpointing*

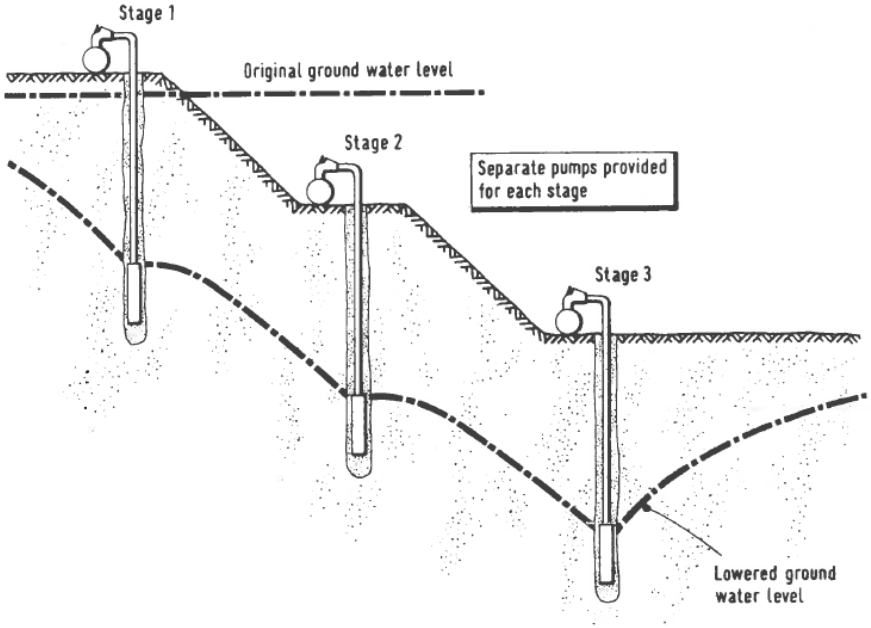

Figure 62 *Three-stage wellpoint installation*

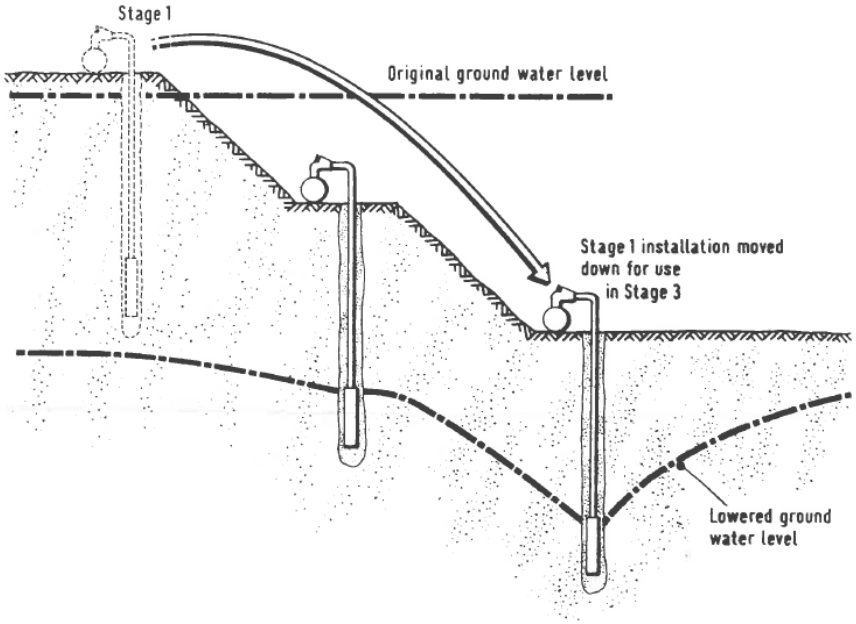

Figure 63 *Multi-stage wellpoint installation*

Figure 64 *Nomogram for wellpoint spacing (m) in clean, uniform sand and gravel*

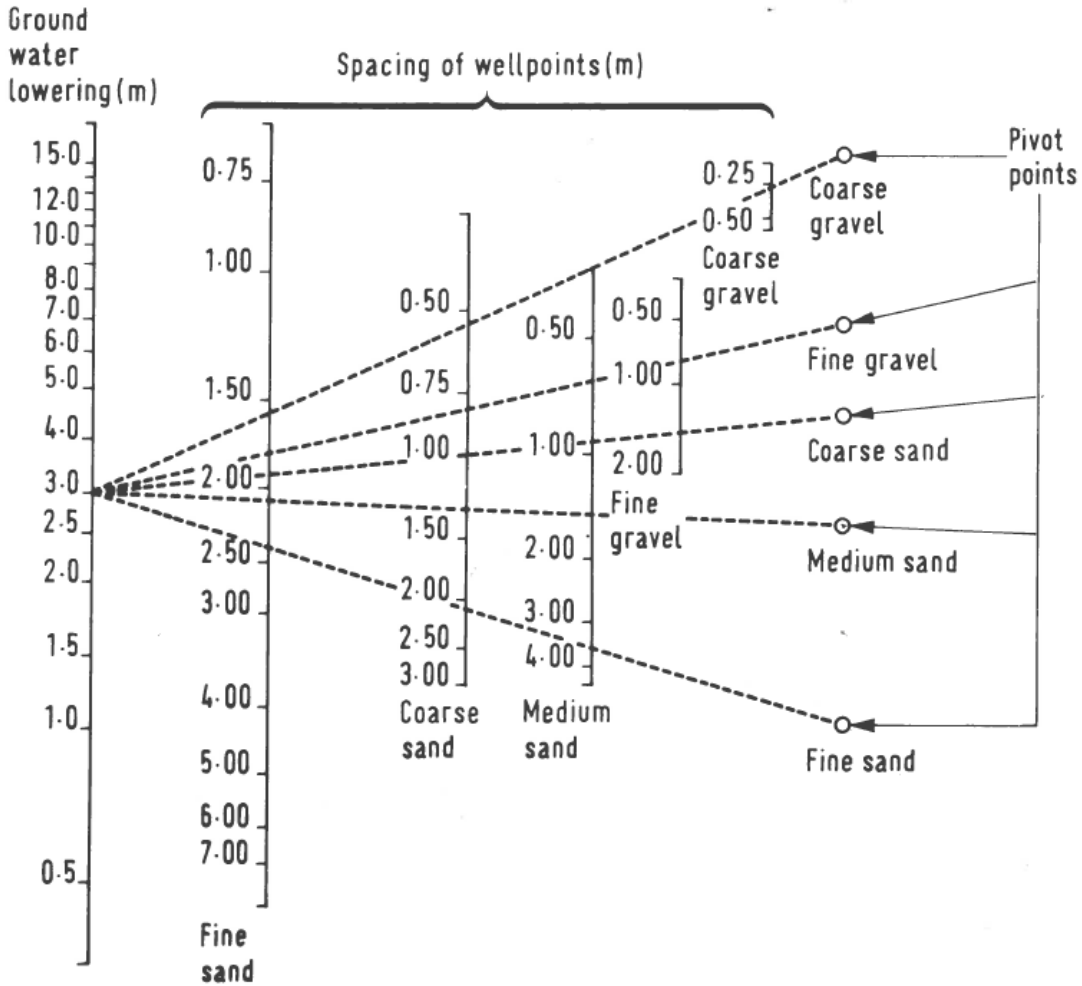

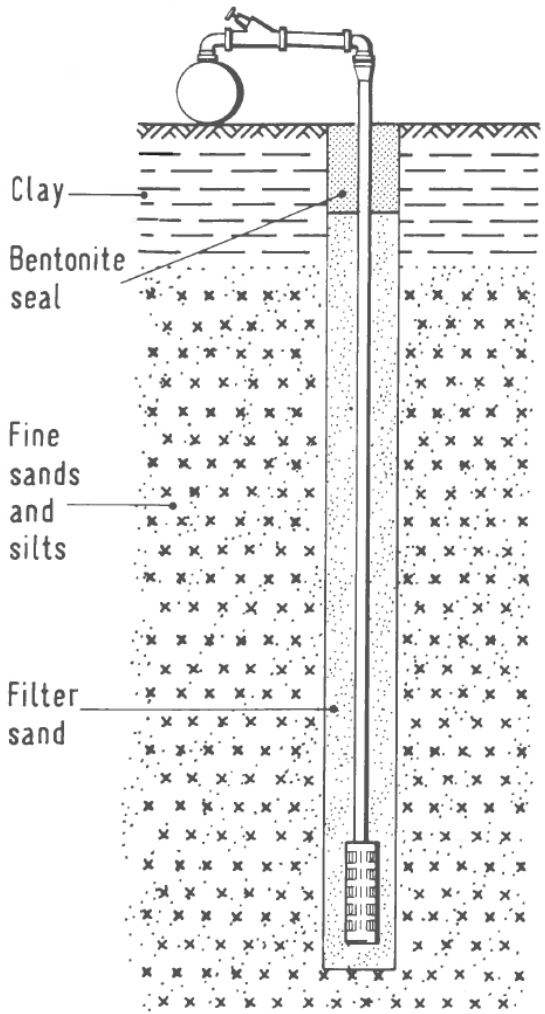

Figure 66 *Sealed vacuum wellpoint*

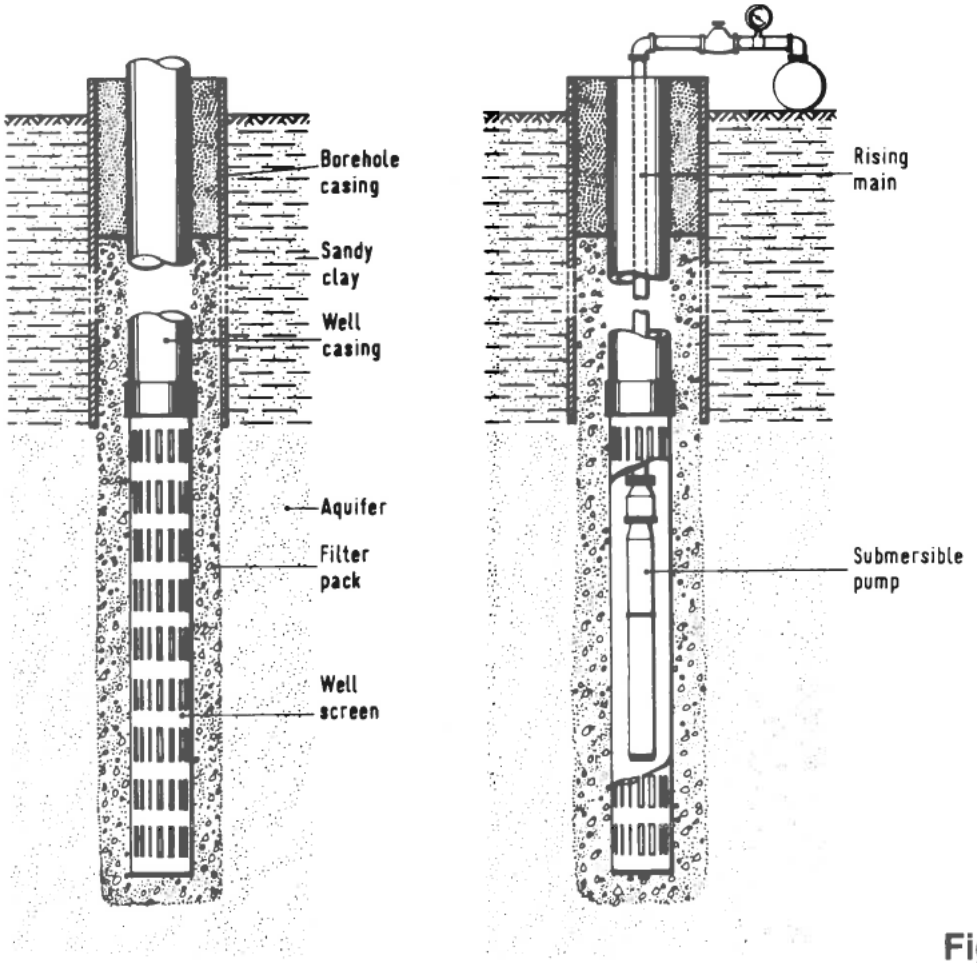

Figure 68 *Deep dewatering well*

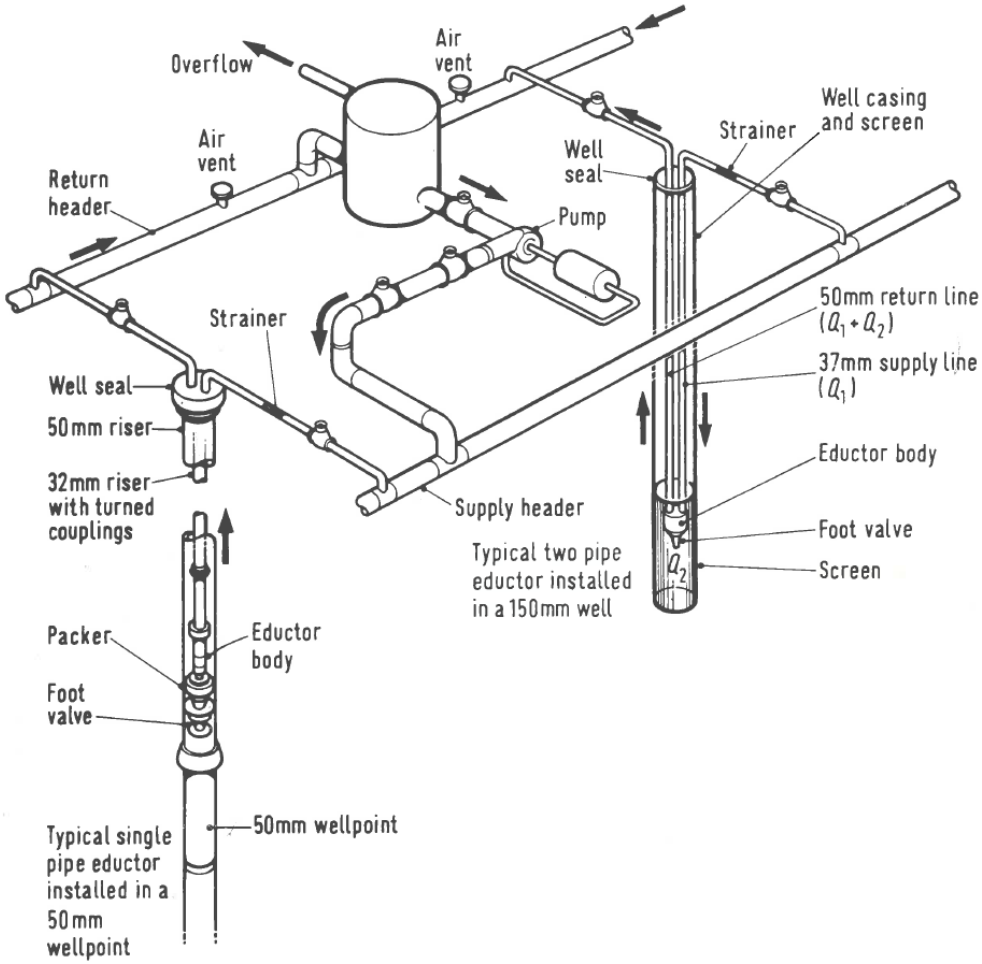

Figure 71 *A basic eductor system*

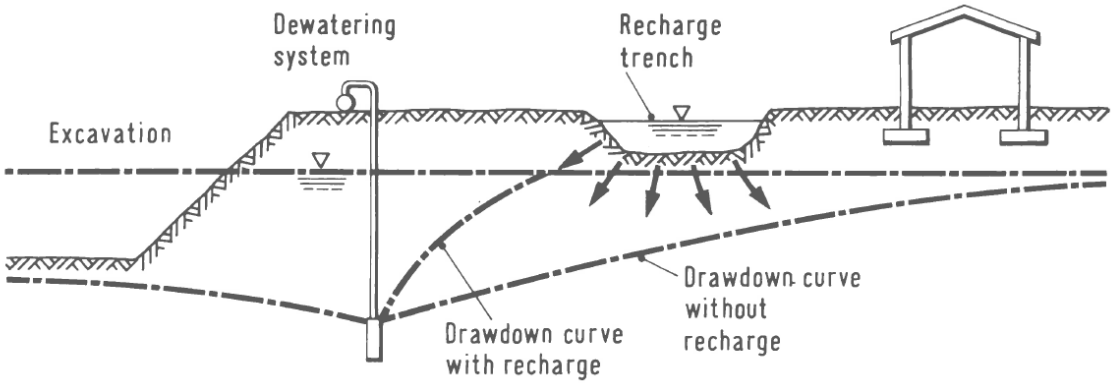

Figure 72 *Recharge by trench*

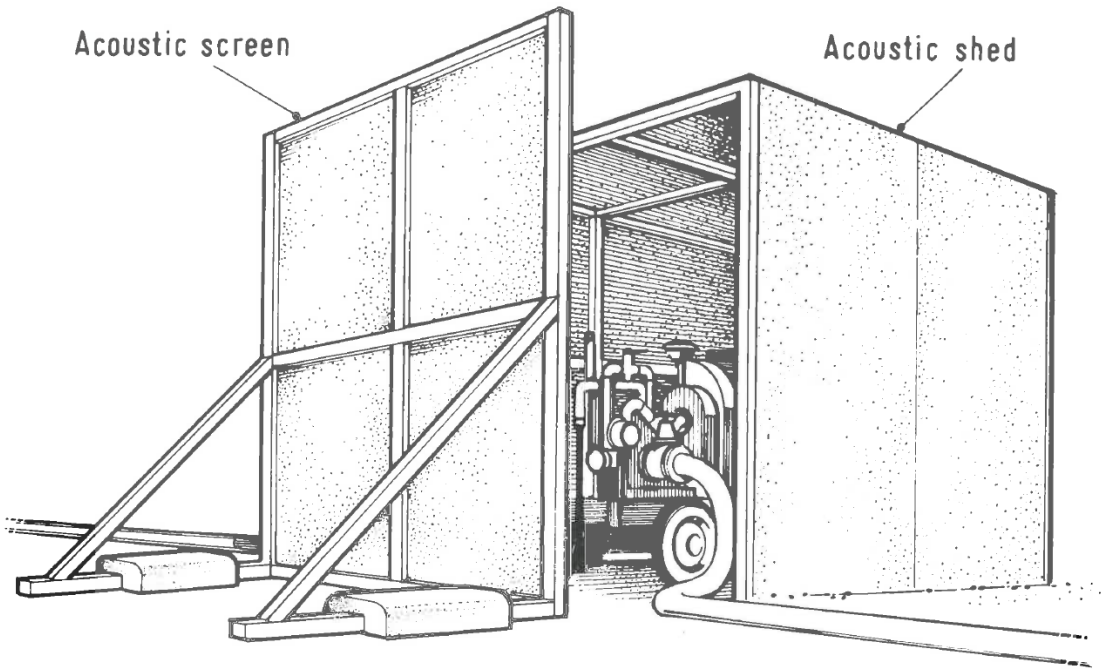

Figure A29 *Use of acoustic screens*

Sheet Piling With Wellpoint System

Photo courtesy of Stuart Well Services (TDI Founding Member)

Secant Pile Wall Shoring System With Internal Deepwells

Photo courtesy of Hydroserv International (TDI Member)

Deepwells Dewatering System

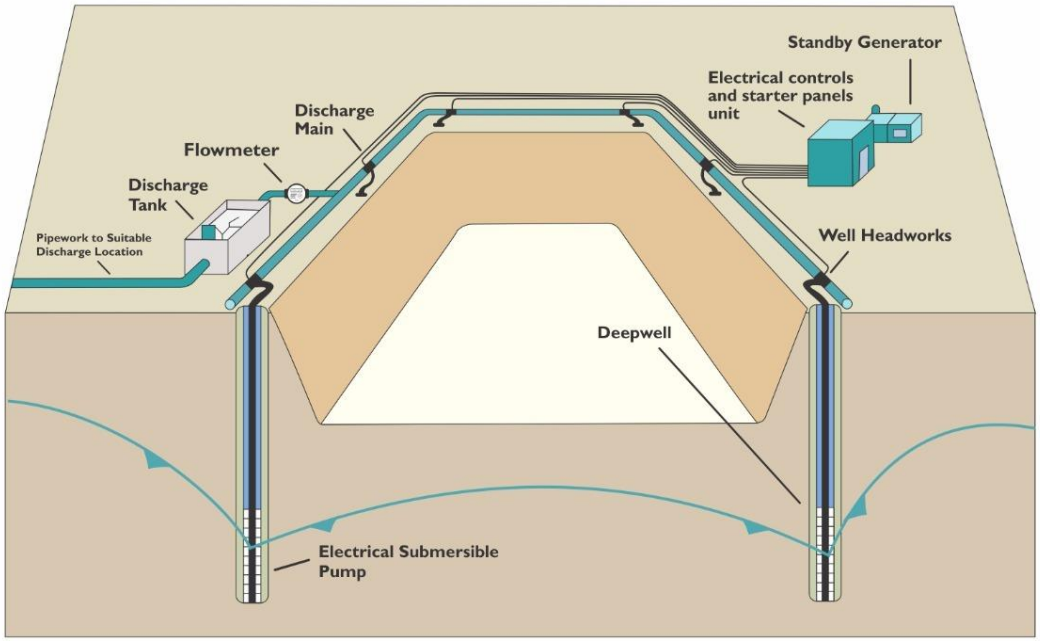

Deepwell System Components

Multi-stage Wellpoint Dewatering System

Photo courtesy of Christoffel Botha – The Dewatering Institute

Dewatering (Concurrent – Sump Pump System)

Photo courtesy of Hydroserv International (TDI Member)

Ejector Systems (Pre - Drainage)

Photo courtesy of Griffin Dewatering (TDI Founding Member)

Hybrid dewatering systems – Deepwells and sump

Base Instability – Confined Aquifers

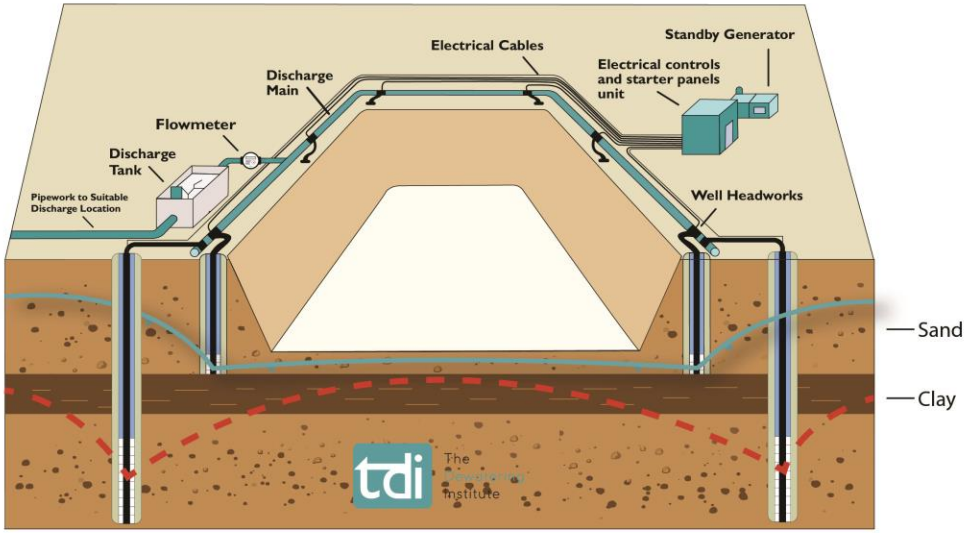

Unconfined aquifer

Confined aquifer

The Dewatering Institute

Bringing together the global dewatering industry

Dewatering systems

Chris@dewateringinst.com

www.dewateringinstcom

Join and promote your business amongst a growing community of dewatering professionals worldwide